T300e

Walk-behind Floor Scrubber

Parts Manual

(S/N 10000000-20000000)

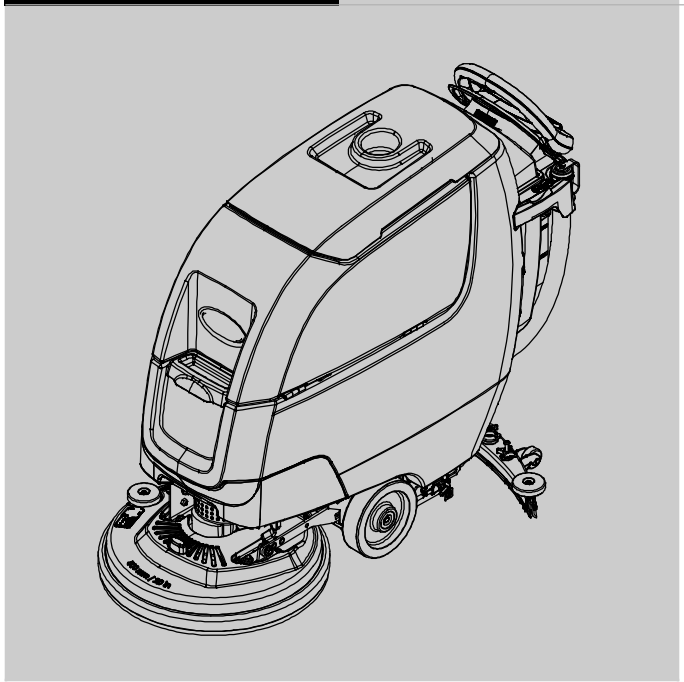

Hygenic® Fully Cleanable Recovery Tank
Tennant*True*® Parts

ec H2O® NanoClean

North America / International

For the latest Parts manuals and other language Operator manuals, visit:

www.tennantco.com/manual

9014505
Rev. 08 (03-2020)

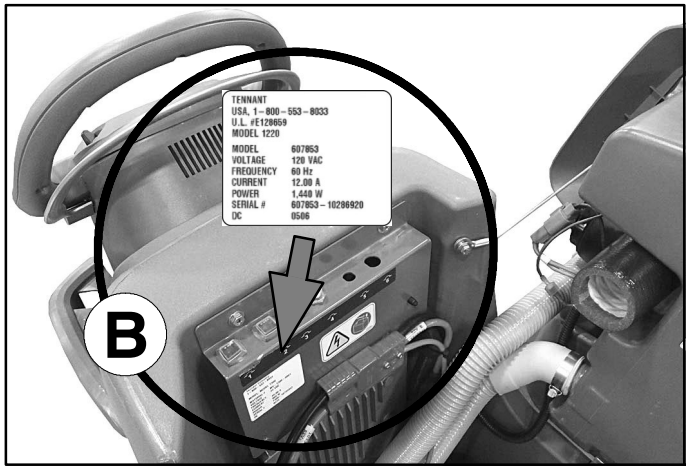

Ref	Part No.	Serial Number	Description	Qty.
1	82681	(000000-)	Bracket Wldt, Lpg Mount	1
▽ 2	63810	(000000-)	Latch Assy, Lpg Tank Mtg, W/Nut	4
▲ 3	51839	(000000-)	Nut Adjustable, Lpg Tank Mtg	2
4	49263	(000000-)	Tie, Cable	3
	82556	(000000- 001039)	Bracket, Vaporizer	1
	54930	(000000-)	Vaporizer, LPG	1

D

C

HOW TO ORDER PARTS - See diagram above

Only use TENNANT Company supplied or equivalent parts. Parts and supplies may be ordered online, by phone, by fax or by mail.

Follow the steps below to ensure prompt delivery.

1. **(A)** Identify the machine model.
2. **(B)** Identify the machine serial number from the data label.
3. **(C)** Ensure the proper serial number is used from the parts list.
4. Identify the part number and quantity. Do not order by page or reference numbers.
5. Provide your name, company name, customer ID number, billing and shipping address, phone number and purchase order number.
6. Provide detail shipping instructions.

(D) ▽ - identifies an assembly
▲ - identifies parts included in assembly

Please fill out at time of installation for future reference.

Model No. - _____

Serial No. - _____

Machine Options - _____

Sales Rep. - _____

Sales Rep. phone no. - _____

Customer ID Number - _____

Installation Date - _____

Tennant Company
PO Box 1452
Minneapolis, MN 55440 USA
Phone: (800) 553-8033

www.tennantco.com

TENNANT Cleaning Systems & Equipment (Shanghai) Co., Ltd
Building 1, No. 3777 Caoying Road
Qingpu Shanghai, China 201712
Phone: 86 21 6922 5333
Fax: 86 21 69225151
www.tennantco.com.cn

Tennant Company Japan
9F Industry & Trade Center
Yokohama, Kanagawa 231-0023
Japan
Telephone: 81-45-640-5630
Fax: 81-45-640-5604

www.tennant.co.jp.com

Specifications and parts are subject to change without notice.

Copyright © 2015 - 2020 TENNANT Company, Printed in U.S.A.

ES

CÓMO SOLICITAR PIEZAS - Consulte el diagrama anterior.

Utilice sólo las piezas suministradas por TENNANT Company o piezas equivalentes. Puede solicitar las piezas a través de internet, por teléfono, por fax o por correo.

Siga los siguientes pasos para que la entrega sea rápida.

1. **(A)** Indique el modelo de máquina.
2. **(B)** Indique el número de serie de la etiqueta de datos.
3. **(C)** Asegúrese de que indica el número de serie correcto de la lista de piezas.
4. Indique la cantidad y el número de la pieza. No realice el pedidoindicando el número de página o el de referencia.
5. Incluya su nombre, el nombre de la empresa, el ID de cliente, las direcciones de envío y facturación, el número de teléfono y el número del pedido de compra.
6. Facilite instrucciones de envío.

(D) ▽ - identifica un conjunto
▲ - identifica piezas de un conjunto

Rellene estos datos cuando realice la instalación para utilizarlos como referencia en el futuro.

Nº modelo - _____
Nº serie - _____
Opciones de la máquina - _____
Vendedor - _____
Nº teléfono vendedor - _____
Nº cliente - _____
Fecha de instalación - _____

FR

COMMENT COMMANDER DES PIÈCES DÉTACHÉES - Voir le schéma ci- dessus.

Utilisez uniquement des pièces fournies par la société TENNANT ou équivalentes. Les pièces et fournitures peuvent être commandées en ligne, par téléphone, fax, ou par courrier.

Suivez les étapes ci- dessous pour assurer une livraison rapide.

1. **(A)** Identifiez le modèle de la machine.
2. **(B)** Identifiez le numéro de série de la machine, à partir de l'étiquette signalétique.
3. **(C)** Assurez- vous que le numéro de série correct est utilisé à partir de la liste de pièces détachées.
4. Identifiez le numéro de pièce et la quantité. Ne commandez pas par page ou numéros de référence.
5. Fournissez votre nom, le nom de votre société, votre numéro d'identification de client, l'adresse de facturation et d'expédition, le numéro de téléphone et le numéro du bon de commande.
6. Fournissez des instructions d'expédition détaillées.

(D) ▽ - identifie un assemblage
▲ - identifie les pièces composant l'assemblage

A remplir au moment de l'installation à titre de référence.

Nº du modèle - _____
Nº de série - _____
Options de la machine - _____
Agent commercial - _____
Nº tél. de l'agent commercial - _____
Numéro d'identification client - _____
Date d'installation - _____

CN

如何订购部件 – 参见下表

仅使用 TENNANT 公司提供的或同等部件。部件和供应可以在线订购，通过电话、传真或邮件订购。

请遵循下面的步骤确保及时交付。

1. (A) 确定机器型号。
2. (B) 从数据标签确定机器序列号。
3. (C) 确保使用部件列表中的正确序列号。
4. 确定部件号和数量。不要按页面或参考编号订购。
5. 提供您的姓名、公司名称、客户 ID 号、付帐和送货地址、电话号码和采购单编号。
6. 提供详细的送货说明。

(D) ▽ – 确定组件
▲ – 确定组件中包含的组件

请在安装时填写供未来参考。

型号 – _____
序列号 – _____
机器选项 – _____
销售代表– _____
销售代表电话号码 – _____
客户 ID 编号 – _____
安装日期 – _____

JP

パーツの発注方法 ?上記の図を参照してください

TENNANT社製のパーツまたは同等品のみをお使いください。
パーツやサプライ品のご注文は、オンライン、電話、FAX、または手紙でお願いいたします。
確実にお届けできるように、以下の情報お知らせください。

1. (A) 製品のモデル名をお知らせください。
2. (B) 製品のデータラベルに印刷されているシリアル番号をお知らせください。
3. (C) パーツリストを参照して、シリアル番号が正しいかご確認ください。
4. パーツ番号と数量をお知らせください。マニュアル/カタログのページ番号や参照番号でのご注文はご遠慮ください。
5. お客様のお名前、会社名、顧客ID番号、請求/発送先住所、電話番号、注文書番号をお知らせください。
6. 発送に関するご希望があれば、明記してください。

(D) ▽ – アセンブリを示します
▲ – アセンブリに含まれるパーツを示します

後日確認できるように、設置時に記入してください。

モデルNo. – _____
シリアルNo. – _____
製品のオプション– _____
販売代理店 – _____
販売代理店の電話番号 – _____
顧客ID番号 – _____
設置日 – _____

STANDARD PARTS

GENERAL RECOMMENDED MAINTENANCE ITEMS 7
BRUSHES AND PAD DRIVER GROUP, 43CM DISK 3- LUG HUB 10
BRUSHES AND PAD DRIVER GROUP, 43CM DISK MAGNETIC HUB 12
BRUSHES AND PAD DRIVER GROUP, 50CM DISK 3- LUG HUB 14
BRUSHES AND PAD DRIVER GROUP, 50CM DISK MAGNETIC HUB 16
BRUSHES AND PAD DRIVER GROUP, 60CM DUAL DISK 3- LUG HUB 18
BRUSHES AND PAD DRIVER GROUP, 60CM DUAL DISK MAGNETIC HUB 20
BRUSHES GROUP, 50CM CYLINDRICAL 22
PAD GROUP, 50CM ORBITAL 23
SCRUB HEAD GROUP, 43CM DISK, 3- LUG HUB 24
SCRUB HEAD GROUP, 43CM DISK, MAGNETIC HUB 26
SCRUB HEAD GROUP, 50CM DISK, 3- LUG HUB 28
SCRUB HEAD GROUP, 50CM DISK, MAGNETIC HUB 30
SCRUB HEAD GROUP, 60CM DUAL DISK, 3- LUG HUB 32
SCRUB HEAD GROUP, 60CM DUAL DISK, 3- LUG HUB - CONT'D 34
SCRUB HEAD GROUP, 60CM DUAL DISK, MAGNETIC HUB 36
SCRUB HEAD GROUP, 60CM DUAL DISK, MAGNETIC HUB - CONT'D 38
SCRUB HEAD GROUP, 50CM CYLINDRICAL . . 40
SCRUB HEAD GROUP, 50CM CYLINDRICAL - CONT'D 42
SCRUB HEAD GROUP, 50CM ORBITAL 44
RECOVERY TANK GROUP, BASE MODEL 46
RECOVERY TANK FILTER AND HOSE GROUP, PINCH CUFF SCREW CAP 48
RECOVERY TANK FILTER AND HOSE GROUP, STANDARD SCREW CAP 50
RECOVERY TANK FILTER AND HOSE GROUP, CONTROL VALVE 52
SOLUTION TANK GROUP 54
FRAME GROUP, PROPEL MODEL 56
FRAME GROUP, PUSH MODEL 58
MANUAL DOWN PRESSURE GROUP 60
SINGLE DOWN PRESSURE GROUP 62
SOLUTION GROUP, BASE MODEL (NEW BARB CONNECTOR STYLE) 64
SOLUTION GROUP, BASE MODEL (ORIGINAL PUSH QUICK CONNECTOR STYLE) 66
SOLUTION GROUP, BASE MODEL ec- H2O (NEW BARB CONNECTOR STYLE) 68
SOLUTION GROUP, BASE MODEL ec- H2O - CONT'D (NEW BARB CONNECTOR STYLE) 70
SOLUTION GROUP, BASE MODEL ec- H2O (ORIGINAL PUSH QUICK CONNECTOR STYLE) 72
ELECTRICAL COMPONENTS GROUP, BASE MODEL 74
LOWER CONSOLE GROUP, ON- BOARD CHARGER 76
LOWER CONSOLE GROUP, OFF- BOARD CHARGER 78
HANDLE GROUP, BASE PROPEL MODEL 80
HANDLE GROUP, BASE PUSH MODEL 82
SHROUD GROUP, DISK AND ORBITAL HEAD . 84
SHROUD GROUP, CYLINDRICAL HEAD 86
SCRUB HEAD LIFT GROUP, 43CM DISK MODEL 88
SCRUB HEAD LIFT GROUP, 50CM DISK MODEL 90
SCRUB HEAD LIFT GROUP, 60CM DUAL DISK MODEL 92
SCRUB HEAD LIFT GROUP, 50CM CYLINDRICAL MODEL 94
SCRUB HEAD LIFT GROUP, 50CM ORBITAL MODEL 96
SQUEEGEE ASSEMBLY, 500MM / 20IN 98
SQUEEGEE LIFT GROUP 100

STANDARD PARTS - Cont'd

BATTERY CABLE GROUP 102
BATTERY GROUP, 105AH C20 WET 104
BATTERY GROUP, 130AH C20 WET 105
BATTERY GROUP, 150AH C20 WET 106
BATTERY GROUP, 140AH C20 AGM 107
LABEL GROUP 108
LABEL GROUP - CONT'D 110
ELECTRICAL DIAGRAM, PROPEL (S/N 10891949 -) 112
ELECTRICAL DIAGRAM, PROPEL (S/N 10000000 - 10891948) 115
ELECTRICAL DIAGRAM, PUSH (S/N 10891710 -) 118
ELECTRICAL DIAGRAM, PUSH (S/N 10000000 - 10891709) 121
ELECTRICAL HARNESS, MAIN PROPEL (S/N 10891949 -) 124
ELECTRICAL HARNESS, MAIN PROPEL (S/N 10000000 - 10822348) 132
ELECTRICAL HARNESS, MAIN PUSH (S/N 10891710 -) 136
ELECTRICAL HARNESS, MAIN PUSH (S/N 10825202 - 10891709) 140
ELECTRICAL HARNESS, OPTIONS PROPEL . . 148
ELECTRICAL HARNESS, OPTIONS PUSH 149
ELECTRICAL HARNESS, BAIL SWITCH 150

OPTIONS

TELEMETRY GROUP 152
BATTERY LIFT OUT BOX KIT 154
HYDROLINK® BATTERY WATERING SYSTEM KIT 156
PARKING BRAKE GROUP 158
DOCUMENTATION GROUP 159

BREAKDOWNS

ec- H2O NANOCLEAN MODULE BREAKDOWN 160
ORBITAL HEAD ECCENTRIC DRIVE BREAKDOWN 162

GENERAL RECOMMENDED MAINTENANCE ITEMS

Part No.	Serial Number	Description	Qty.
1016763	(10000000- 20000000)	Brush Assy, Disk, Scb, 17.0d, Abr (3- Lug)	1
1016764	(10000000- 20000000)	Brush Assy, Disk, Scb, 17.0d, Nyl (3- Lug)	1
1016765	(10000000- 20000000)	Brush Assy, Disk, Scb, 17.0d, Pyp (3- Lug)	1
1213034	(10000000- 20000000)	Brush Assy, Disk, Scb, 43cm, Mag, Nyl	1
1213035	(10000000- 20000000)	Brush Assy, Disk, Scb, 43cm, Mag, Pyp	1
1213037	(10000000- 20000000)	Brush Assy, Disk, Scb, 43cm, Mag, Ab	1
1243350	(10000000- 20000000)	Pad, Polish, 17.0d, White [1pick=1ctn]	1
1243349	(10000000- 20000000)	Pad, Buff, 17.0d, Red [1pick=1ctn]	1
1243348	(10000000- 20000000)	Pad, Scb, 17.0d, Blu [1pick=1ctn]	1
1243664	(10000000- 20000000)	Pad, Strip, 17.0d Brown [1pick=1ctn]	1
1243663	(10000000- 20000000)	Pad, Strip, 17.0d Blk[Hi Prod1pick=1ctn]	1
1243669	(10000000- 20000000)	Pad, Surf Prep, 17.0d Maroon[1pick=1ctn]	1
1240391	(10000000- 20000000)	Pad, Polish, 17.0d, Yel [1pick=1ctn]	1
1016805	(10000000- 20000000)	Brush Assy, Disk, Scb, 20.0d, Abr (3- Lug)	1
1016810	(10000000- 20000000)	Brush Assy, Disk, Scb, 20.0d, Nyl (3- Lug)	1
1016811	(10000000- 20000000)	Brush Assy, Disk, Scb, 20.0d, Pyp (3- Lug)	1
1210386	(10000000- 20000000)	Brush Assy, Disk, Scb, 50cm, Mag, Nyl	1
1213032	(10000000- 20000000)	Brush Assy, Disk, Scb, 50cm, Mag, Pyp	1
1213033	(10000000- 20000000)	Brush Assy, Disk, Scb, 50cm, Mag, Ab	1
32505	(10000000- 20000000)	Washer, Flat, 92b 156d 2.6l, Pad Driver	1
1243338	(10000000- 20000000)	Pad, Polish, 20.0d, White [1pick=1ctn]	1
1243339	(10000000- 20000000)	Pad, Buff, 20.0d, Red [1pick=1ctn]	1
1243340	(10000000- 20000000)	Pad, Scb, 20.0d, Blu [1pick=1ctn]	1
1243566	(10000000- 20000000)	Pad, Stripping 20.0d, Brn [1pick=1ctn]	1
1243661	(10000000- 20000000)	Pad, Strip, 20.0d Blk[Hi Prod1pick=1ctn]	1
1243670	(10000000- 20000000)	Pad, Surf Prep, 20.0d Maroon[1pick=1ctn]	1
1240393	(10000000- 20000000)	Pad, Polish, 20.0d, Yel [1pick=1ctn]	1
1056306	(10000000- 20000000)	Brush Assy, Disk, Scb, 12.0d, 3- Lug, Nyl	2
1056313	(10000000- 20000000)	Brush Assy, Disk, Scb, 12.0d, 3- Lug, Pyp	2
1063297	(10000000- 20000000)	Brush Assy, Disk, Scb, 12.0d, 3- Lug, Abr	2
1210136	(10000000- 20000000)	Brush Assy, Disk, Scb, 30cm, Mag, Nyl	2
1213040	(10000000- 20000000)	Brush Assy, Disk, Scb, 30cm, Mag, Pyp	2
1213041	(10000000- 20000000)	Brush Assy, Disk, Scb, 30cm, Mag, Ab	2
1243345	(10000000- 20000000)	Pad, Polish, 12.0d, White [1pick=1ctn]	2
1243346	(10000000- 20000000)	Pad, Buff, 12.0d, Red [1pick=1ctn]	2
1243347	(10000000- 20000000)	Pad, Scb, 12.0d, Blu [1pick=1ctn]	2
1243662	(10000000- 20000000)	Pad, Strip, 12.0d Brown [1pick=1ctn]	2
1243671	(10000000- 20000000)	Pad, Strip, 12.0d Blk[Hi Prod1pick=1ctn]	2
1243665	(10000000- 20000000)	Pad, Surf Prep, 12.0d Maroon[1pick=1ctn]	2
1240353	(10000000- 20000000)	Pad, Polish, 12.0d, Yel [1pick=1ctn]	2
1209188	(10000000- 20000000)	Brush, Scb, 21l, 20sr, Nyl (Cylindrical Model)	2
1212762	(10000000- 20000000)	Brush, Scb, 21l, 20sr, Pyp (Cylindrical Model)	2
1243351	(10000000- 20000000)	Pad, Polish, 20 X 14, White [1pick=1ctn] (Orbital Model)	1
1243352	(10000000- 20000000)	Pad, Buff, 20 X 14, Red [1pick=1ctn] (Orbital Model)	1
1243353	(10000000- 20000000)	Pad, Scb, 20 X 14, Blu [1pick=1ctn] (Orbital Model)	1
1243672	(10000000- 20000000)	Pad, Surf Prep, 20x14 Maroon[1pick=1ctn](Orbital Model)	1
1074740	(10000000- 20000000)	Pad, Scb, 14 X 20, Green [1pick=1ctn] (Orbital Model)	1
1075562	(10000000- 20000000)	Pad, Stripper, 20 X 14, Blk [1pick=1ctn] (Orbital Model)	1
1228000	(10000000- 20000000)	Pad, Melamine, 14” X 20” [Case Of 5] (Orbital Model)	1
1240342	(10000000- 20000000)	Pad, Polish, 20 X 14, Yel [1pick=1ctn] (Orbital Model)	1
1217830	(10000000- 20000000)	Pad, Backer, 20 X 14 (Orbital Model)	1

GENERAL RECOMMENDED MAINTENANCE ITEMS

	Part No.	Serial Number	Description	Qty.
	1223582	(10000000- 20000000)	Wheel, Scrbr, 8.00d, W/ Taper (Propel Model)	2
	1223724	(10000000- 20000000)	Wheel, Scrbr, 8.00d, W/ Brg (Push Model)	2
	1212422	(10000000- 20000000)	Caster, Swivel [Wicke 224051]	1
∇	1211537	(10000000- 20000000)	Filter, In- Line, Pf06/Pf06 080m 2.6l Epd	1
▲	1218885	(10000000- 20000000)	Gasket [Epdm, F/1211537]	1
▲	1218883	(10000000- 20000000)	Screen, Fltr, 80 Mesh, Ss [W/ Cage]	1
▲	613991	(10000000- 20000000)	Bowl, Clr, Short, F/1005302	1
∇	9014172	(10000000- 20000000)	Squeegee Kit, Linatex, Am [T300/E/Ss300]	1
▲	1010560	(10000000- 20000000)	Wheel, Bmpr, 80d X 25w, Non- Marking	2
▲	630477	(10000000- 20000000)	Wheel, Pyu, 02.0d 0.38w, Gray	2
▲∇	9015731	(10000000- 20000000)	Blade Kit, 500mm, Linatex (Standard)	1
▲▲	1203953	(10000000- 20000000)	Blade, Sqge, Rear, 836l, Linatex[500mm] (Standard)	1
▲▲	1203954	(10000000- 20000000)	Blade, Sqge, Front, 788l, Linatex[500mm] (Standard)	1
∇	9015732	(10000000- 20000000)	Blade Kit, 500mm, Urethane (Option)	1
▲	1215609	(10000000- 20000000)	Blade, Sqge, Rear, 836l, Urethane[500mm] (Option)	1
▲	1215611	(10000000- 20000000)	Blade, Sqge, Front, 788l, Urethane[500mm (Option)	1
∇	9015730	(10000000- 20000000)	Blade Kit, 500mm, Gum (Option)	1
▲	1215610	(10000000- 20000000)	Blade, Sqge, Rear, 836l, Gum[500mm] (Option)	1
▲	1215612	(10000000- 20000000)	Blade, Sqge, Front, 788l, Gum[500mm] (Option)	1
	1055019	(10000000- 10978978)	Bumper, Head, 43cm, W/ Bristle Skirt, Im	1
	1055025	(10000000- 10978978)	Bumper, Head, 50cm, W/ Bristle Skirt, Im	1
	1072656	(10000000- 20000000)	Bumper, Head, 60cm, Bristle Skirt	1
	1010560	(10000000- 20000000)	Wheel, Bmpr, 80d X 25w, Non- Marking (Disk Heads)	1
∇	9011810	(10000000- 20000000)	Module Kit, Replmt [Ec- H2o, B 02] (See Breakdowns)	1
▲	9013646	(10000000- 20000000)	Cartridge, Ec- H2o Nanoclean Wcm, 270ml	1
∇	1228117	(10978979- 20000000)	Motor, Ele, 24vdc 150rpm 0.68hp, 17mm (43CM Disk)	1
∇	1226976	(10834063- 10978978)	Motor, Ele, 24vdc 0215rpm 650w, 17mm (43CM Disk)	1
▲	1227273	(10834063- 20000000)	Vr, Brush Kit, Motor, Ele (4pc)	1
∇	1210703	(10000000- 10834062)	Motor, Ele, 24vdc 0200rpm 1.00hp, 17mm (43CM Disk) (Replaced By 9015159)	1
▲	222606	(10000000- 10834062)	Vr, Brush Kit, Motor, Ele [Ip] (4Pc) (For Imperial Motor - Frame #P56SG681)	1
▲	1045790	(10000000- 10834062)	Brush Kit, Replmt,Carbon 24vdc[1pk=1set](4Pc) (For Sanrong Motor - Frame #56S)	1
∇	1228117	(10978979- 20000000)	Motor, Ele, 24vdc 150rpm 0.68hp, 17mm (50CM Disk)	1
∇	1226976	(10834387- 10978978)	Motor, Ele, 24vdc 0215rpm 650w, 17mm (50CM Disk)	1
▲	1227273	(10834387- 20000000)	Vr, Brush Kit, Motor, Ele (4pc)	1
∇	1210703	(10000000- 10834386)	Motor, Ele, 24vdc 0200rpm 1.00hp, 17mm (50CM Disk) (Replaced By 9015159)	1
▲	222606	(10000000- 10834386)	Vr, Brush Kit, Motor, Ele [Ip] (4Pc) (For Imperial Motor - Frame #P56SG681)	1
▲	1045790	(10000000- 10834386)	Brush Kit, Replmt,Carbon 24vdc[1pk=1set](4Pc) (For Sanrong Motor - Frame #56S)	1
∇	1227280	(10835154- 20000000)	Motor, 24vdc, 2000rpm, 7/8hp (60CM Disk Head)	1
▲	1059370	(10000000- 20000000)	Brush, Motor, Replmt [Bag Of 4)	1
∇	1210212	(10000000- 10835153)	Motor, 24vdc, 2000rpm, 7/8hp, Us (60CM Disk Head) (Replaced By 9015160)	1
▲	1059370	(10000000- 20000000)	Brush, Motor, Replmt [Bag Of 4)	2
∇	1210202	(10000000- 20000000)	Motor, Ele, 24vdc [Vw Cyl] (Cylindrical Head)	1
▲	1059370	(10000000- 20000000)	Brush, Motor, Replmt [Bag Of 4)	1

GENERAL RECOMMENDED MAINTENANCE ITEMS

	Part No.	Serial Number	Description	Qty.
∇	1226909	(10827598- 20000000)	Motor, Ele, 24vdc, 2200rpm, .6hp, 22mm (Orbital Head)	1
▲	1059370	(10000000- 20000000)	Brush, Motor, Replmt [Bag Of 4)	1
∇	1212669	(10000000- 10827597)	Motor, Ele, 24vdc, 2200rpm, .6hp, 22mm (Orbital Head) (Replaced By 9015162)	1
▲	1059370	(10000000- 20000000)	Brush, Motor, Replmt [Bag Of 4)	1
	1055305	(10000000- 20000000)	Belt, Drive, 6pj, Ej139 [T3] (60CM Disk Head)	1
∇	9014166	(10000000- 20000000)	Kit, Belt, Motor (Includes Belt & Installation Tool) (Cylindrical Head)	1
▲	1209587	(10000000- 20000000)	Belt, Motor [Vw Single Motor]	1
▲	1213132	(10000000- 20000000)	Tool, Installation, Belt	1
	1215666	(10000000- 20000000)	Skirt, Side, Cyl, Floating (Cylindrical Head)	2
	630477	(10000000- 20000000)	Wheel, Pyu, 02.0d 0.38w, Gray (Cylindrical Head)	4
∇	1219312	(10000000- 20000000)	Fan, Vacuum, 5.7d, 024vdc, 2 Stage	1
▲	372883	(10000000- 20000000)	Vr, Brush Kit, Motor, Ele (1 Pkg = 2 Pcs)	1
∇	1216386	(10000000- 20000000)	Motor, Transaxle, 24vdc, Replmt [Ul, Ce]	1
▲	1212351	(10000000- 20000000)	Brush Kit, Carbon, Transaxle, Ul (1 Kit = 4 Pcs)	1
∇	9014872	(10785189- 20000000)	Kit, Deflector, Tray, Debris, Cl, [T300]	1
▲	1225187	(10785189- 20000000)	Seal, Rbr, Clsd, 12.7Th, 24.0Id, 40.0Od	1
▲	1207357	(10000000- 20000000)	Tray, Debris, Tank, Recvy [T300]	1
	9014905	(10786729- 20000000)	Cover Kit, Circuitbreaker, Ci[T300/E/Ss]	1
	630052	(10000000- 20000000)	Float, Shut- Off, (2)Ball, 1.75d	1
∇	1213010	(10000000- 20000000)	Hose Assy, Drain, 1.5d 017l 1.5/Cap[Pvc] (Black - Standard)	1
▲	1218955	(10000000- 20000000)	Cap, Drain Assy [Black]	1
∇	1246719	(10949064- 20000000)	Hose Assy, Drain, 1.5id X 21.9l [Pu] (Gray - Option)	1
▲∇	1219134	(10000000- 20000000)	Cap, Drain Assy [Gray]	1
▲▲	1008637	(10000000- 20000000)	Seal, Org, 1.48id 1.76od	1
∇	1213008	(10000000- 10949063)	Hose Assy, Drain, 1.5d 025l 1.5/Cap [Pu] (Gray - Option) (No Longer Available - Replaced by Gray Pinch Cuff Screw Cap 1246719)	1
▲	1219134	(10000000- 20000000)	Cap, Drain Assy [Gray]	1
∇	9014171	(10000000- 10949063)	Hose Assy, With Valve (Gray - Option) (No Longer Available - Replaced by Gray Pinch Cuff Screw Cap 1246719)	1
▲	1051986	(10000000- 10949063)	Valve, Ball, 2way, 1.0id Pvc, W/Handle (No Longer Available - Replaced by Gray Pinch Cuff Screw Cap 1246719)	1
▲	1222591	(10000000- 10949063)	Hose Assy, 45cuff,1.5d 021l 1.5/1.5[Pu]	1
	1211220	(10000000- 20000000)	Hose Assy,W/2cuff,1.5d 022l 1.5/1.5[Pvc] (Black - Standard)	1
	1204663	(10000000- 20000000)	Hose Assy, W/2cuff,1.5d 031l 1.5/1.5[Pu] (Gray - Option)	1
	1210472	(10000000- 20000000)	Seal, Afmkt, Bulb, 0.50d .13grip, 05ft (Rec Tank Lid)	1
	1046428	(10000000- 20000000)	Seal, Afmkt, Rbr, Clsd, Adh, 02ft (Front Fill Cover)	1

BRUSHES AND PAD DRIVER GROUP, 43CM DISK 3- LUG HUB

355330

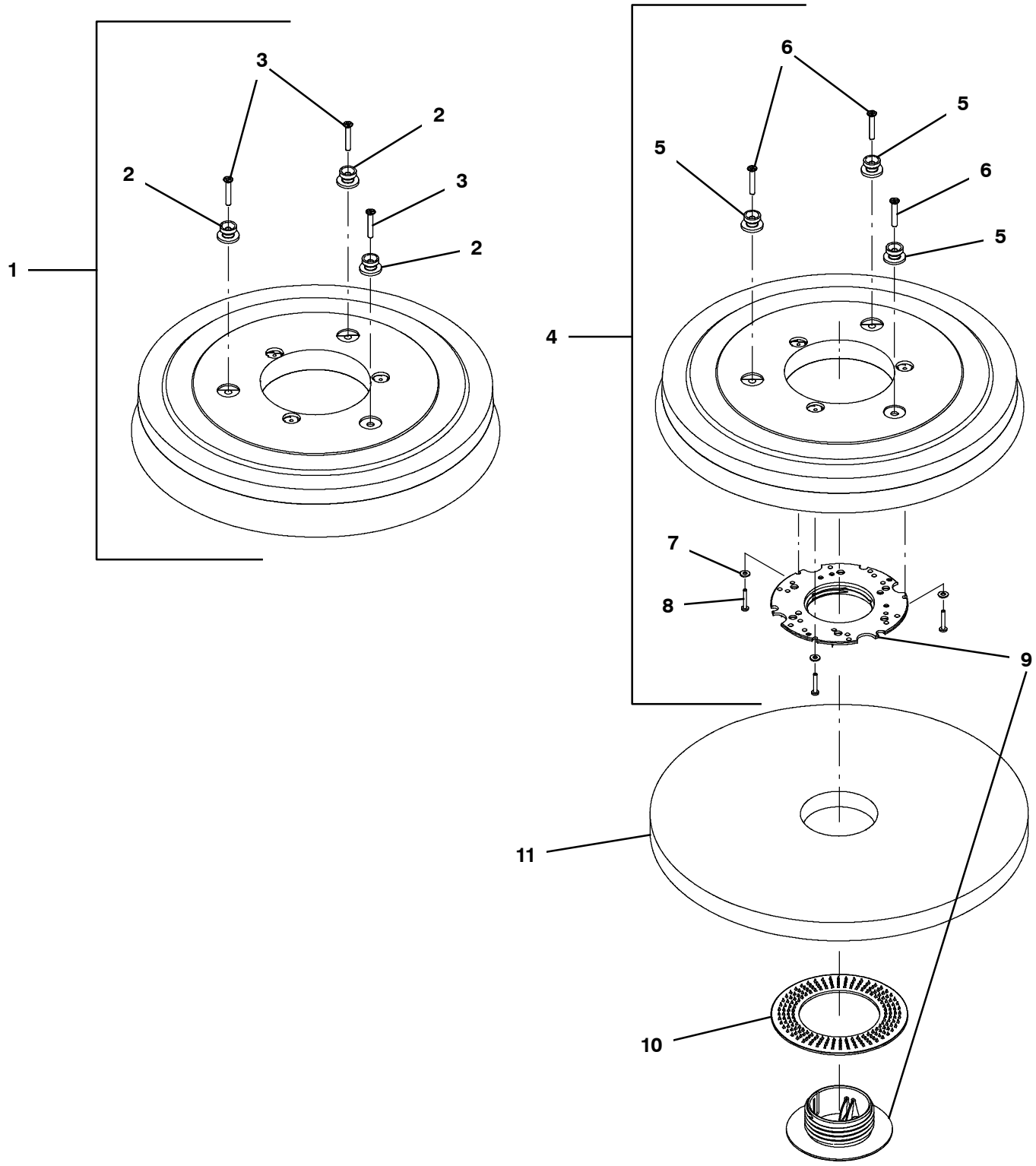

BRUSHES AND PAD DRIVER GROUP, 43CM DISK 3- LUG HUB

	Ref.	Part No.	Serial Number	Description	Qty.
∇	1	1016763	(10000000- 20000000)	Brush Assy, Disk, Scb, 17.0d, Abr	1
∇	1	1016764	(10000000- 20000000)	Brush Assy, Disk, Scb, 17.0d, Nyl	1
∇	1	1016765	(10000000- 20000000)	Brush Assy, Disk, Scb, 17.0d, Pyp	1
▲	2	1013018	(10000000- 20000000)	Stud, Drive, Brush Pad	3
▲	3	1021316	(10000000- 20000000)	Screw, Flt, Phl, M6 X 1.00 X 35, Ss	3
∇	4	1212965	(10000000- 20000000)	Driver Assy, Pad, 43cm, Brush, 3 Lug	1
▲	5	1013018	(10000000- 20000000)	Stud, Drive, Brush Pad	3
▲	6	1021316	(10000000- 20000000)	Screw, Flt, Phl, M6 X 1.00 X 35, Ss	3
▲	7	41579	(10000000- 20000000)	Washer, Flat, 08, Ss	3
▲	8	04403	(10000000- 20000000)	Screw, Pan, Phl, M4 X 0.70 X 25, Nl, Ss	3
▲	9	32506	(10000000- 20000000)	Device, Centering, Rh Pad Retainer	1
	10	32505	(10000000- 20000000)	Washer, Flat, 92b 156d 2.6l, Pad Driver	1
	11	1243350	(10000000- 20000000)	Pad, Polish, 17.0d, White [1pick=1ctn]	1
	11	1243349	(10000000- 20000000)	Pad, Buff, 17.0d, Red [1pick=1ctn]	1
	11	1243348	(10000000- 20000000)	Pad, Scb, 17.0d, Blu [1pick=1ctn]	1
	11	1243664	(10000000- 20000000)	Pad, Strip, 17.0d Brown [1pick=1ctn]	1
	11	1243663	(10000000- 20000000)	Pad, Strip, 17.0d Blk[Hi Prod1pick=1ctn]	1
	11	1243669	(10000000- 20000000)	Pad, Surf Prep, 17.0d Maroon[1pick=1ctn]	1
	11	1240391	(10000000- 20000000)	Pad, Polish, 17.0d, Yel [1pick=1ctn]	1

∇ ASSEMBLY

▲ INCLUDED IN ASSEMBLY

BRUSHES AND PAD DRIVER GROUP, 43CM DISK MAGNETIC HUB

355338

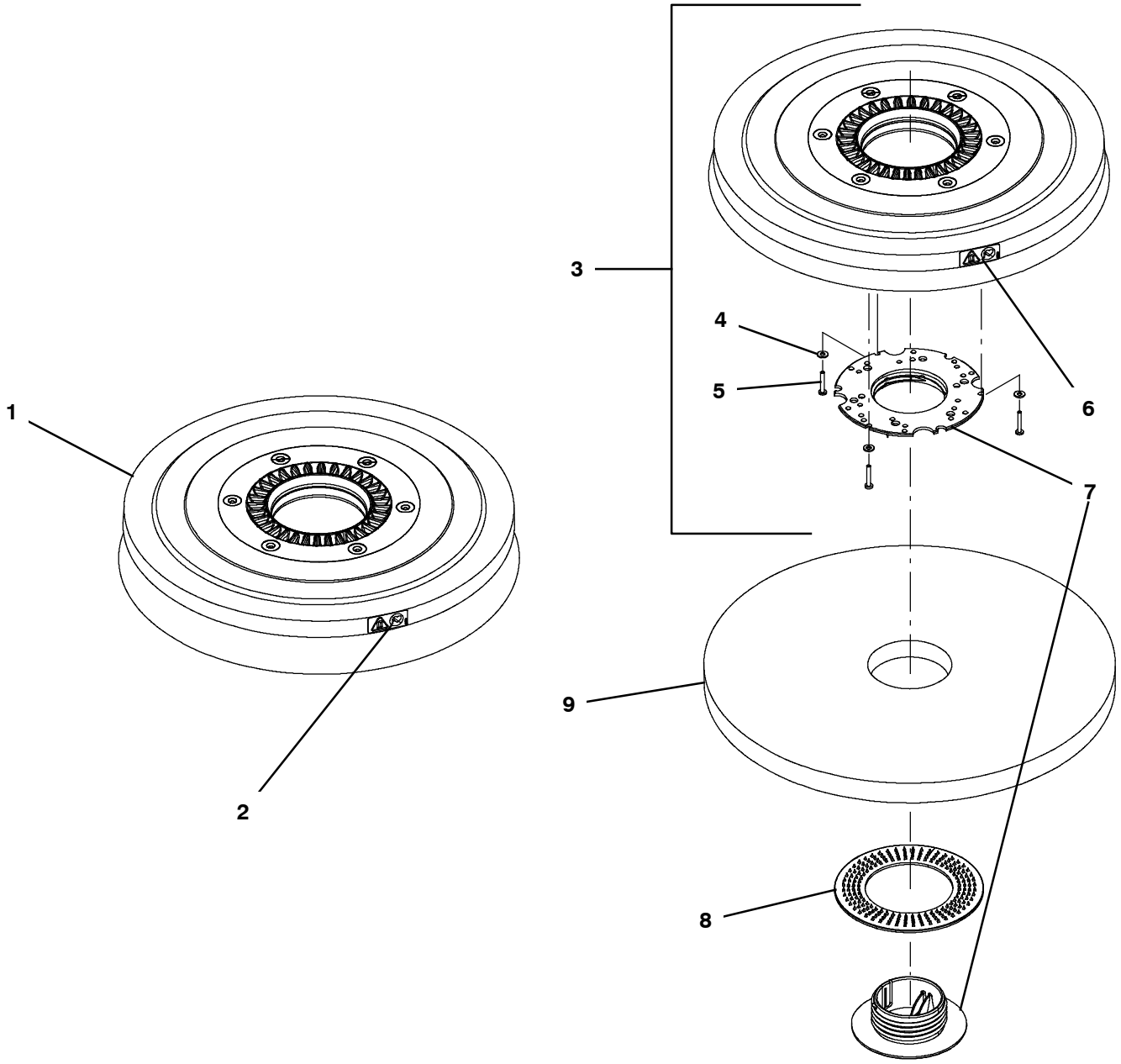

BRUSHES AND PAD DRIVER GROUP, 43CM DISK MAGNETIC HUB

	Ref.	Part No.	Serial Number	Description	Qty.
∇	1	1213034	(10000000- 20000000)	Brush Assy, Disk, Scb, 43cm, Mag, Nyl	1
∇	1	1213035	(10000000- 20000000)	Brush Assy, Disk, Scb, 43cm, Mag, Pyp	1
∇	1	1213037	(10000000- 20000000)	Brush Assy, Disk, Scb, 43cm, Mag, Ab	1
▲	2	1218392	(10000000- 20000000)	Label, Safety, Magnet, Med	1
∇	3	1211869	(10000000- 20000000)	Driver Assy, Pad, 43cm, Brush, Magnetic	1
▲	4	41579	(10000000- 20000000)	Washer, Flat, 08, Ss	3
▲	5	1212542	(10000000- 20000000)	Screw, Pan, Phl, M4 X 0.70 X 12, Nl, Ss	3
▲	6	1218392	(10000000- 20000000)	Label, Safety, Magnet, Med	1
▲	7	32506	(10000000- 20000000)	Device, Centering, Rh Pad Retainer	1
	8	32505	(10000000- 20000000)	Washer, Flat, 92b 156d 2.6l, Pad Driver	1
	9	1243350	(10000000- 20000000)	Pad, Polish, 17.0d, White [1pick=1ctn]	1
	9	1243349	(10000000- 20000000)	Pad, Buff, 17.0d, Red [1pick=1ctn]	1
	9	1243348	(10000000- 20000000)	Pad, Scb, 17.0d, Blu [1pick=1ctn]	1
	9	1243664	(10000000- 20000000)	Pad, Strip, 17.0d Brown [1pick=1ctn]	1
	9	1243663	(10000000- 20000000)	Pad, Strip, 17.0d Blk[Hi Prod1pick=1ctn]	1
	9	1243669	(10000000- 20000000)	Pad, Surf Prep, 17.0d Maroon[1pick=1ctn]	1
	9	1240391	(10000000- 20000000)	Pad, Polish, 17.0d, Yel [1pick=1ctn]	1

∇ ASSEMBLY

▲ INCLUDED IN ASSEMBLY

BRUSHES AND PAD DRIVER GROUP, 50CM DISK 3- LUG HUB

355331

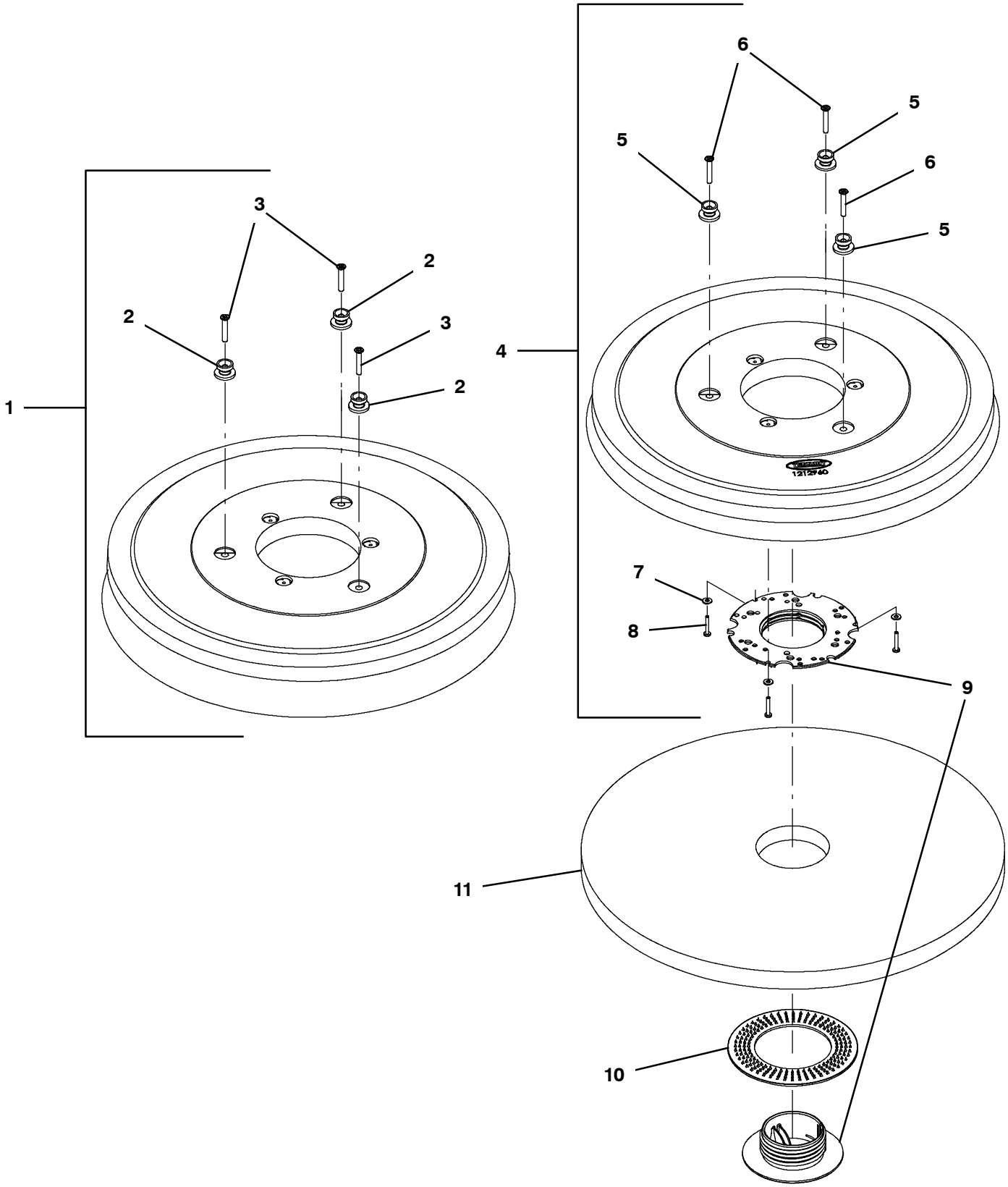

BRUSHES AND PAD DRIVER GROUP, 50CM DISK 3- LUG HUB

	Ref.	Part No.	Serial Number	Description	Qty.
∇	1	1016805	(10000000- 20000000)	Brush Assy, Disk, Scb, 20.0d, Abr	1
∇	1	1016810	(10000000- 20000000)	Brush Assy, Disk, Scb, 20.0d, Nyl	1
∇	1	1016811	(10000000- 20000000)	Brush Assy, Disk, Scb, 20.0d, Pyp	1
▲	2	1013018	(10000000- 20000000)	Stud, Drive, Brush Pad	3
▲	3	1021316	(10000000- 20000000)	Screw, Flt, Phl, M6 X 1.00 X 35, Ss	3
∇	4	1212960	(10000000- 20000000)	Driver Assy, Pad, 50cm, Brush, 3 Lug	1
▲	5	1013018	(10000000- 20000000)	Stud, Drive, Brush Pad	3
▲	6	1021316	(10000000- 20000000)	Screw, Flt, Phl, M6 X 1.00 X 35, Ss	3
▲	7	41579	(10000000- 20000000)	Washer, Flat, 08, Ss	3
▲	8	04403	(10000000- 20000000)	Screw, Pan, Phl, M4 X 0.70 X 25, Nl, Ss	3
▲	9	32506	(10000000- 20000000)	Device, Centering, Rh Pad Retainer	1
	10	32505	(10000000- 20000000)	Washer, Flat, 92b 156d 2.6l, Pad Driver	1
	11	1243338	(10000000- 20000000)	Pad, Polish, 20.0d, White [1pick=1ctn]	1
	11	1243339	(10000000- 20000000)	Pad, Buff, 20.0d, Red [1pick=1ctn]	1
	11	1243340	(10000000- 20000000)	Pad, Scb, 20.0d, Blu [1pick=1ctn]	1
	11	1243566	(10000000- 20000000)	Pad, Stripping 20.0d, Brn [1pick=1ctn]	1
	11	1243661	(10000000- 20000000)	Pad, Strip, 20.0d Blk[Hi Prod1pick=1ctn]	1
	11	1243670	(10000000- 20000000)	Pad, Surf Prep, 20.0d Maroon[1pick=1ctn]	1
	11	1240393	(10000000- 20000000)	Pad, Polish, 20.0d, Yel [1pick=1ctn]	1

∇ ASSEMBLY

▲ INCLUDED IN ASSEMBLY

BRUSHES AND PAD DRIVER GROUP, 50CM DISK MAGNETIC HUB

355339

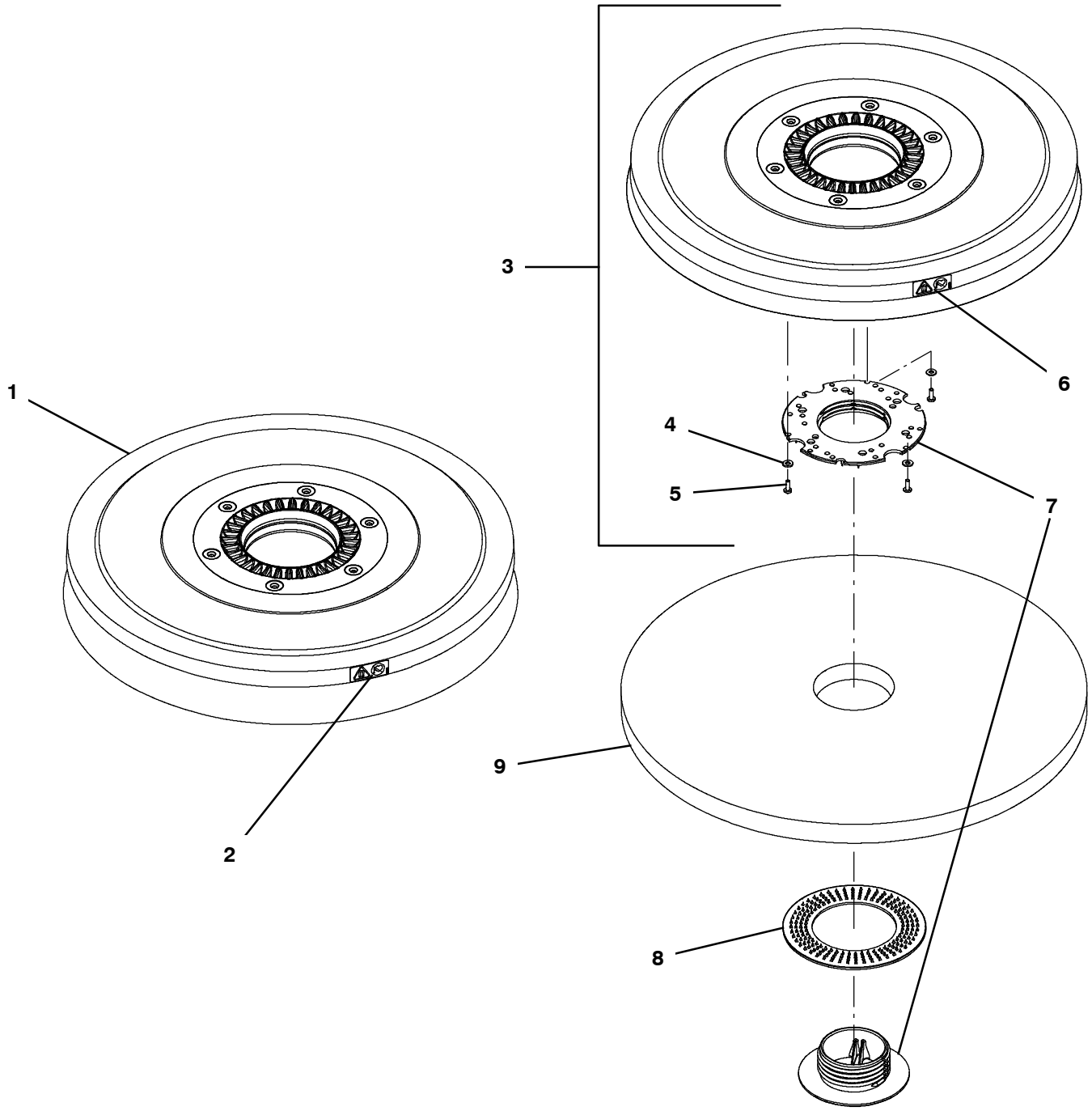

BRUSHES AND PAD DRIVER GROUP, 50CM DISK MAGNETIC HUB

	Ref.	Part No.	Serial Number	Description	Qty.
∇	1	1210386	(10000000- 20000000)	Brush Assy, Disk, Scb, 50cm, Mag, Nyl	1
∇	1	1213032	(10000000- 20000000)	Brush Assy, Disk, Scb, 50cm, Mag, Pyp	1
∇	1	1213033	(10000000- 20000000)	Brush Assy, Disk, Scb, 50cm, Mag, Ab	1
▲	2	1218392	(10000000- 20000000)	Label, Safety, Magnet, Med	1
∇	3	1209197	(10000000- 20000000)	Driver Assy, Pad, 50cm, Brush, Magnetic	1
▲	4	41579	(10000000- 20000000)	Washer, Flat, 08, Ss	3
▲	5	1212542	(10000000- 20000000)	Screw, Pan, Phl, M4 X 0.70 X 12, Nl, Ss	3
▲	6	1218392	(10000000- 20000000)	Label, Safety, Magnet, Med	1
▲	7	32506	(10000000- 20000000)	Device, Centering, Rh Pad Retainer	1
	8	32505	(10000000- 20000000)	Washer, Flat, 92b 156d 2.6l, Pad Driver	1
	9	1243338	(10000000- 20000000)	Pad, Polish, 20.0d, White [1pick=1ctn]	1
	9	1243339	(10000000- 20000000)	Pad, Buff, 20.0d, Red [1pick=1ctn]	1
	9	1243340	(10000000- 20000000)	Pad, Scb, 20.0d, Blu [1pick=1ctn]	1
	9	1243566	(10000000- 20000000)	Pad, Stripping 20.0d, Brn [1pick=1ctn]	1
	9	1243661	(10000000- 20000000)	Pad, Strip, 20.0d Blk[Hi Prod1pick=1ctn]	1
	9	1243670	(10000000- 20000000)	Pad, Surf Prep, 20.0d Maroon[1pick=1ctn]	1
	9	1240393	(10000000- 20000000)	Pad, Polish, 20.0d, Yel [1pick=1ctn]	1

∇ ASSEMBLY

▲ INCLUDED IN ASSEMBLY

BRUSHES AND PAD DRIVER GROUP, 60CM DUAL DISK 3- LUG HUB

355332

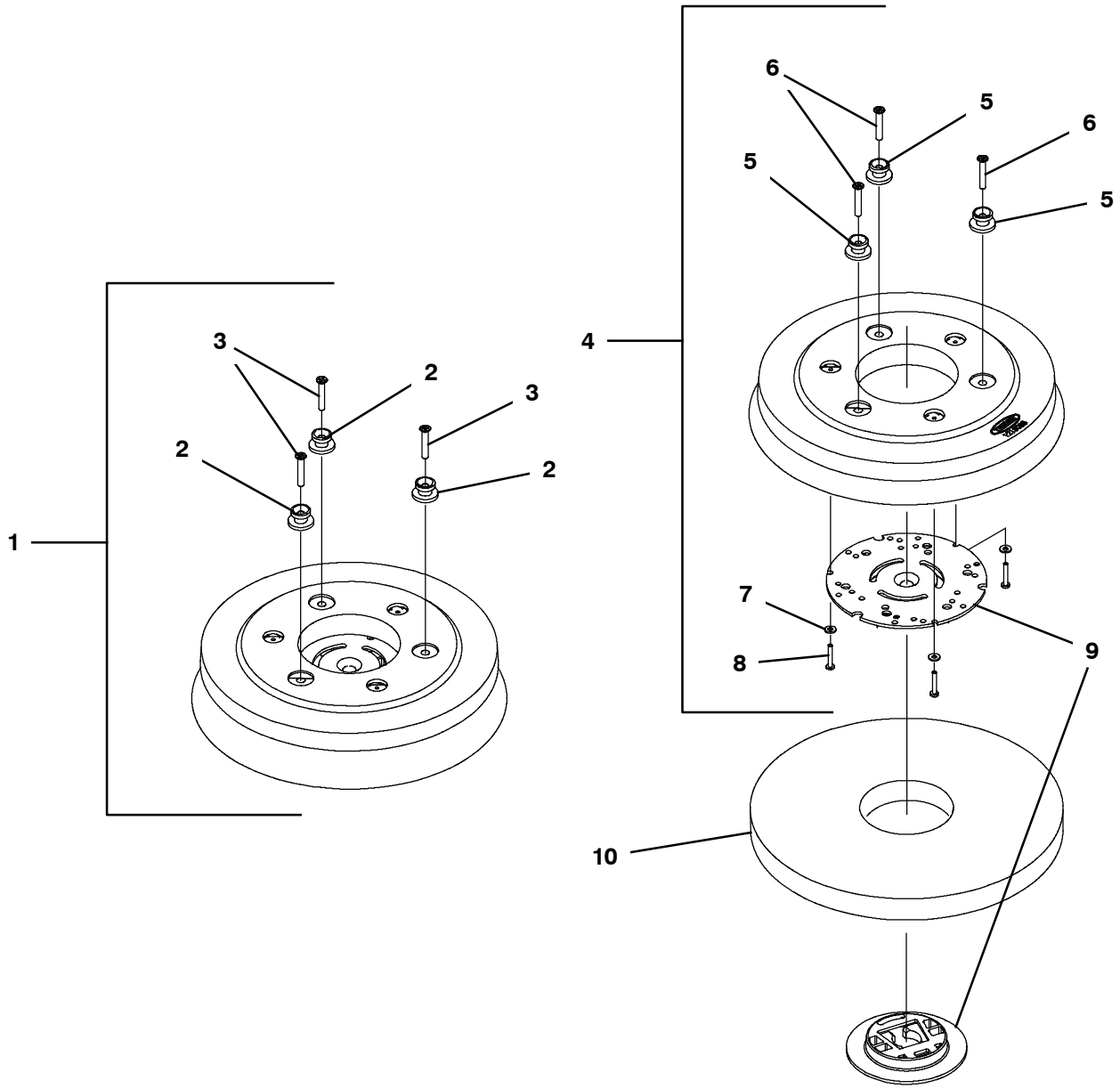

BRUSHES AND PAD DRIVER GROUP, 60CM DUAL DISK 3- LUG HUB

	Ref.	Part No.	Serial Number	Description	Qty.
∇	1	1056306	(10000000- 20000000)	Brush Assy, Disk, Scb, 12.0d, 3- Lug, Nyl	2
∇	1	1056313	(10000000- 20000000)	Brush Assy, Disk, Scb, 12.0d, 3- Lug, Pyp	2
∇	1	1063297	(10000000- 20000000)	Brush Assy, Disk, Scb, 12.0d, 3- Lug, Abr	2
▲	2	1055558	(10000000- 20000000)	Mount, Lug, Pad- Driver [T3]	3
▲	3	1021316	(10000000- 20000000)	Screw, Flt, Phl, M6 X 1.00 X 35, Ss	3
∇	4	1213038	(10000000- 20000000)	Driver Assy, Pad, 30cm, Brush, 3 Lug	2
▲	5	1055558	(10000000- 20000000)	Mount, Lug, Pad- Driver [T3]	3
▲	6	1021316	(10000000- 20000000)	Screw, Flt, Phl, M6 X 1.00 X 35, Ss	3
▲	7	41579	(10000000- 20000000)	Washer, Flat, 08, Ss	3
▲	8	04403	(10000000- 20000000)	Screw, Pan, Phl, M4 X 0.70 X 25, Nl, Ss	3
▲	9	370095	(10000000- 20000000)	Device, Centering, Clip On, Tl [Gf Pp]	1
	10	1243345	(10000000- 20000000)	Pad, Polish, 12.0d, White [1pick=1ctn]	2
	10	1243346	(10000000- 20000000)	Pad, Buff, 12.0d, Red [1pick=1ctn]	2
	10	1243347	(10000000- 20000000)	Pad, Scb, 12.0d, Blu [1pick=1ctn]	2
	10	1243662	(10000000- 20000000)	Pad, Strip, 12.0d Brown [1pick=1ctn]	2
	10	1243671	(10000000- 20000000)	Pad, Strip, 12.0d Blk[Hi Prod1pick=1ctn]	2
	10	1243665	(10000000- 20000000)	Pad, Surf Prep, 12.0d Maroon[1pick=1ctn]	2
	10	1240353	(10000000- 20000000)	Pad, Polish, 12.0d, Yel [1pick=1ctn]	2

∇ ASSEMBLY

▲ INCLUDED IN ASSEMBLY

BRUSHES AND PAD DRIVER GROUP, 60CM DUAL DISK MAGNETIC HUB

355340

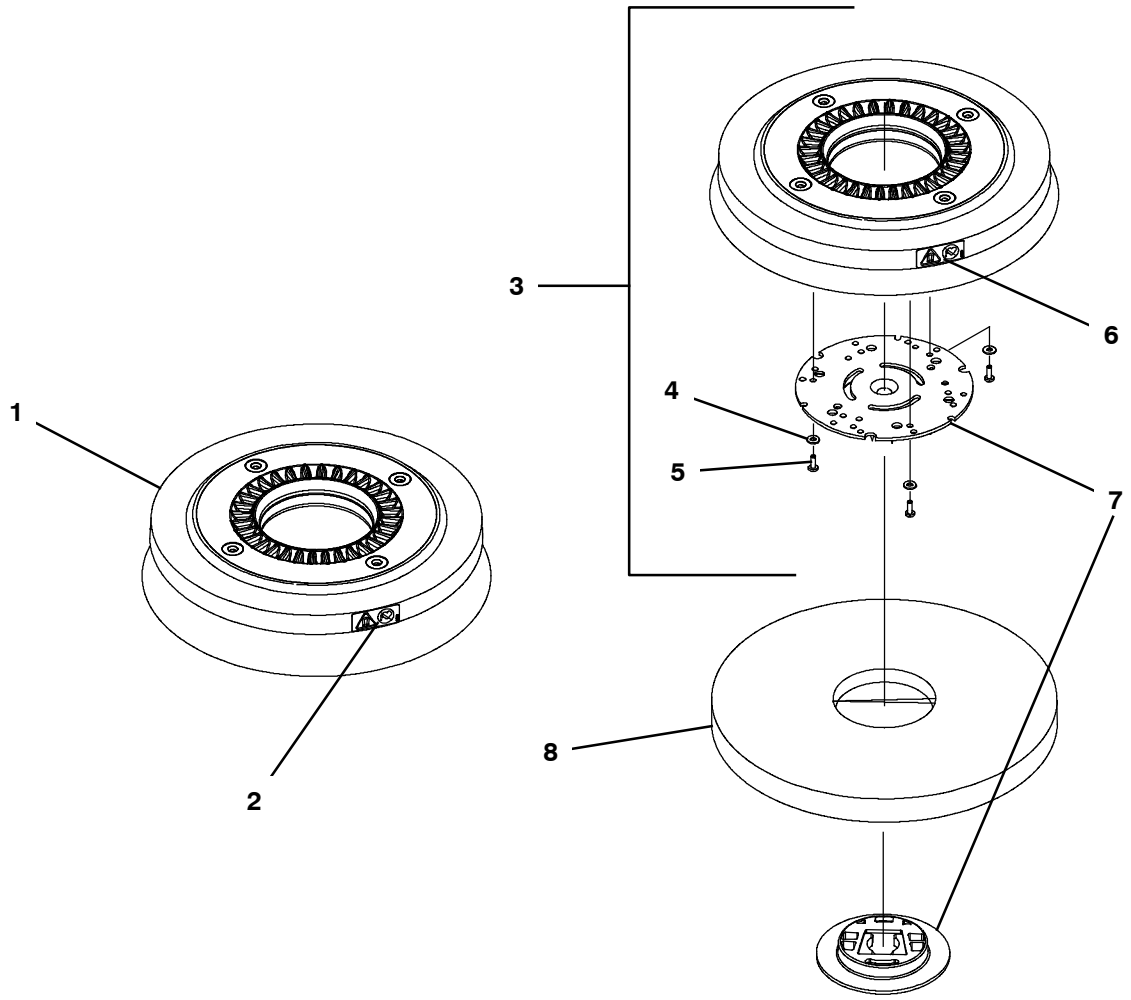

BRUSHES AND PAD DRIVER GROUP, 60CM DUAL DISK MAGNETIC HUB

	Ref.	Part No.	Serial Number	Description	Qty.
∇	1	1210136	(10000000- 20000000)	Brush Assy, Disk, Scb, 30cm, Mag, Nyl	2
∇	1	1213040	(10000000- 20000000)	Brush Assy, Disk, Scb, 30cm, Mag, Pyp	2
∇	1	1213041	(10000000- 20000000)	Brush Assy, Disk, Scb, 30cm, Mag, Ab	2
▲	2	1218392	(10000000- 20000000)	Label, Safety, Magnet, Med	1
∇	3	1209160	(10000000- 20000000)	Driver Assy, Pad, 30cm, [Magnetic]	2
▲	4	41579	(10000000- 20000000)	Washer, Flat, 08, Ss	3
▲	5	1212542	(10000000- 20000000)	Screw, Pan, Phl, M4 X 0.70 X 12, Nl, Ss	3
▲	6	1218392	(10000000- 20000000)	Label, Safety, Magnet, Med	1
▲	7	370095	(10000000- 20000000)	Device, Centering, Clip On, Tl [Gf Pp]	1
	8	1243345	(10000000- 20000000)	Pad, Polish, 12.0d, White [1pick=1ctn]	2
	8	1243346	(10000000- 20000000)	Pad, Buff, 12.0d, Red [1pick=1ctn]	2
	8	1243347	(10000000- 20000000)	Pad, Scb, 12.0d, Blu [1pick=1ctn]	2
	8	1243662	(10000000- 20000000)	Pad, Strip, 12.0d Brown [1pick=1ctn]	2
	8	1243671	(10000000- 20000000)	Pad, Strip, 12.0d Blk[Hi Prod1pick=1ctn]	2
	8	1243665	(10000000- 20000000)	Pad, Surf Prep, 12.0d Maroon[1pick=1ctn]	2
	8	1240353	(10000000- 20000000)	Pad, Polish, 12.0d, Yel [1pick=1ctn]	2

∇ ASSEMBLY

▲ INCLUDED IN ASSEMBLY

BRUSHES GROUP, 50CM CYLINDRICAL

355333

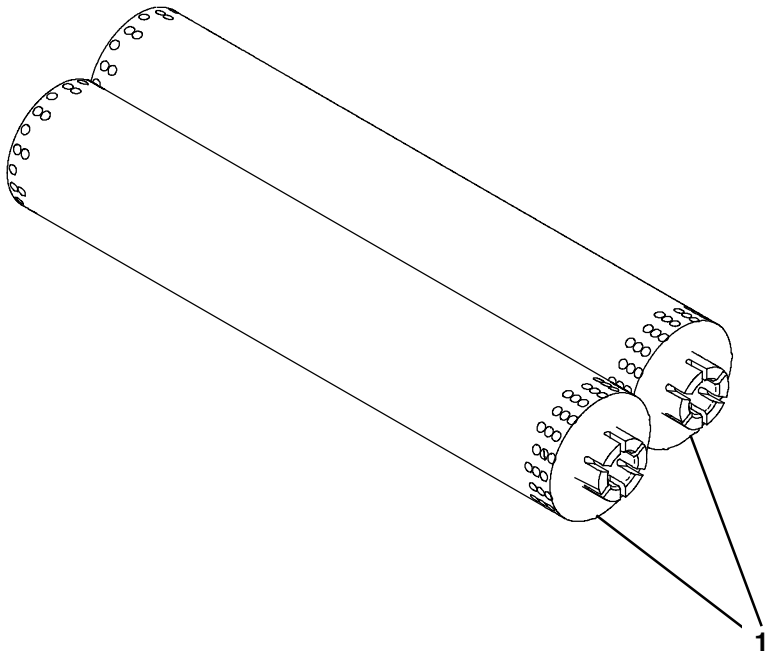

Ref.	Part No.	Serial Number	Description	Qty.
1	1209188	(10000000- 20000000)	Brush, Scb, 21l, 20sr, Nyl	2
1	1212762	(10000000- 20000000)	Brush, Scb, 21l, 20sr, Pyp	2

PAD GROUP, 50CM ORBITAL

355334

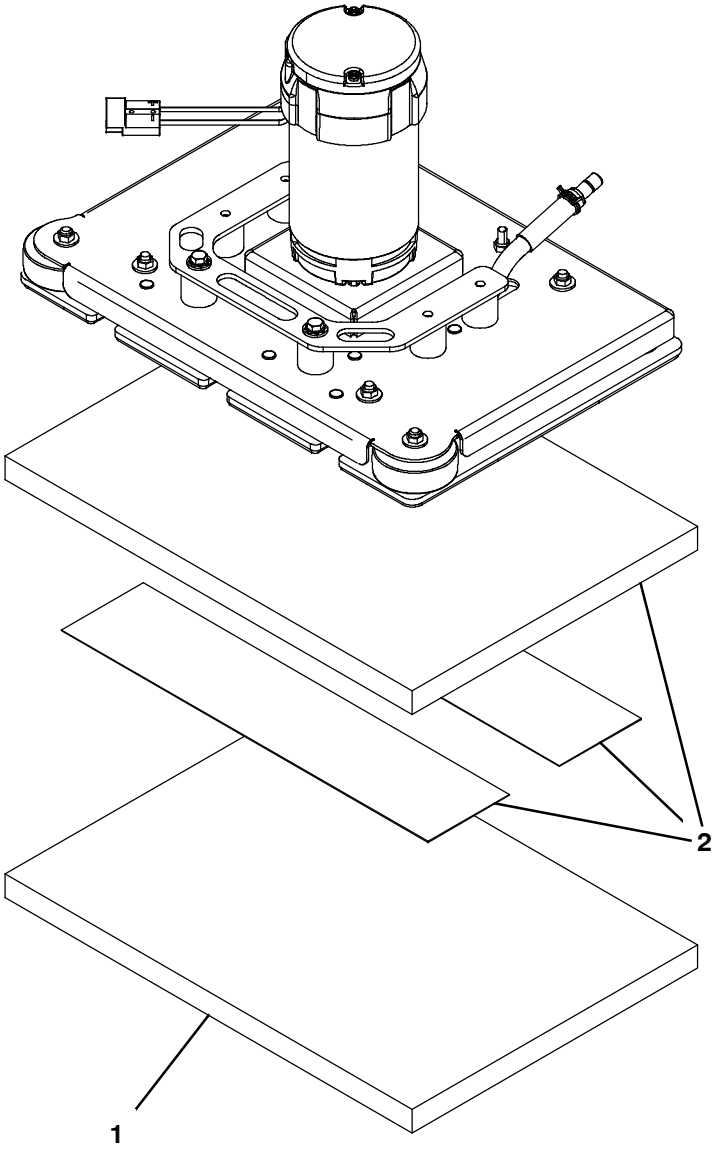

Ref.	Part No.	Serial Number	Description	Qty.
1	1243351	(10000000- 20000000)	Pad, Polish, 20 X 14, White [1pick=1ctn]	1
1	1243352	(10000000- 20000000)	Pad, Buff, 20 X 14, Red [1pick=1ctn]	1
1	1243353	(10000000- 20000000)	Pad, Scb, 20 X 14, Blu [1pick=1ctn]	1
1	1243672	(10000000- 20000000)	Pad, Surf Prep, 20x14 Maroon[1pick=1ctn]	1
1	1074740	(10000000- 20000000)	Pad, Scb, 14 X 20, Green [1pick=1ctn]	1
1	1075562	(10000000- 20000000)	Pad, Stripper, 20 X 14, Blk [1pick=1ctn]	1
1	1228000	(10000000- 20000000)	Pad, Melamine, 14” X 20” [Case Of 5]	1
1	1240342	(10000000- 20000000)	Pad, Polish, 20 X 14, Yel [1pick=1ctn]	1
2	1217830	(10000000- 20000000)	Pad, Backer, 20 X 14 (Includes Hook & Loop Fastener)	1

SCRUB HEAD GROUP, 43CM DISK, 3- LUG HUB

355290

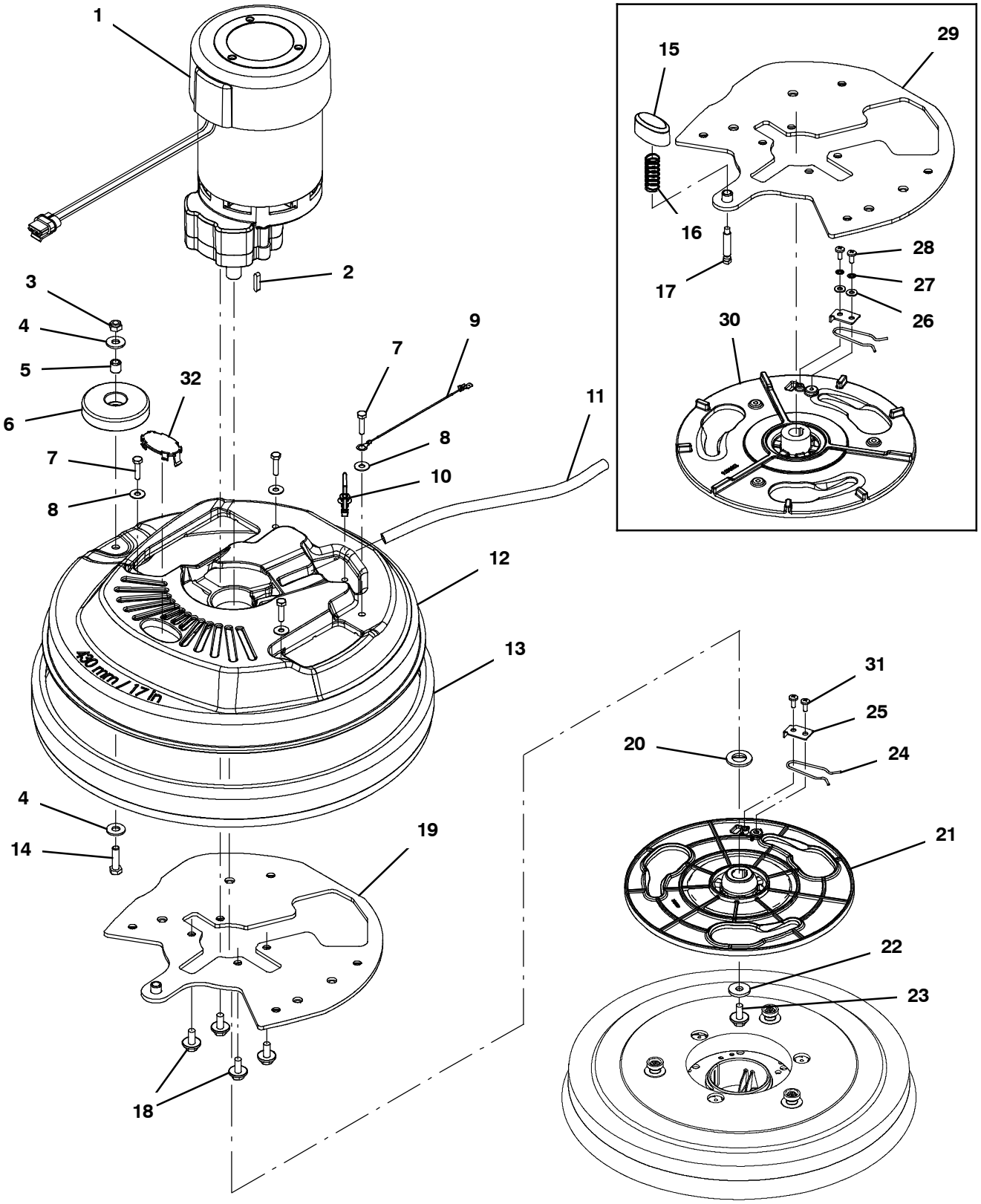

SCRUB HEAD GROUP, 43CM DISK, 3- LUG HUB

	Ref.	Part No.	Serial Number	Description	Qty.
∇	1	1228117	(10978979- 20000000)	Motor, Ele, 24vdc 150rpm 0.68hp, 17mm	1
∇	1	1226976	(10834063- 10978978)	Motor, Ele, 24vdc 0215rpm 650w, 17mm	1
▲		1227273	(10834063- 20000000)	Vr, Brush Kit, Motor, Ele (4pc)	1
▲	2	1014328	(10000000- 20000000)	Key, Sq, 05mm X 05mm, 25mml	1
∇	1	1210703	(10000000- 10834062)	Motor, Ele, 24vdc 0200rpm 1.00hp, 17mm (Replaced By 9015159)	1
▲		222606	(10000000- 10834062)	Vr, Brush Kit, Motor, Ele [Ip] (4Pc) (For Imperial Motor - Frame #P56SG681)	1
▲		1045790	(10000000- 10834062)	Brush Kit, Replmt,Carbon 24vdc[1pk=1set](4Pc) (For Sanrong Motor - Frame #56S)	1
▲	2	1014328	(10000000- 20000000)	Key, Sq, 05mm X 05mm, 25mml	1
	3	08713	(10000000- 20000000)	Nut, Hex, Lock, M8 X 1.25, Nl, Ss	1
	4	01685	(10000000- 20000000)	Washer, Flat, 0.38b 0.88d .08, Ss	2
	5	222460	(10000000- 20000000)	Sleeve, P/M, 0.32b 0.50d 0.5l [430ss]	1
	6	1010560	(10000000- 20000000)	Wheel, Bmpr, 80d X 25w, Non- Marking	1
	7	1016005	(10000000- 20000000)	Screw, Hex, M6 X 1.00 X 25, Nl, Fl, Ss	4
	8	01684	(10000000- 20000000)	Washer, Flat, 0.27b 0.69d .05, Ss	4
	9	1074344	(10000000- 20000000)	Harness, Ele [Ring With .250m Tail]	1
	10	1210807	(10000000- 20000000)	Wire, Tie [W/.25” Fir Tree Clip]	1
	11	9014145	(10000000- 20000000)	Hose, Afmkt, Pe, .375id .50od, 05ft	1
	12	1212324	(10000000- 20000000)	Housing, Head, 43cm	1
	13	1055019	(10000000- 10978978)	Bumper, Head, 43cm, W/ Bristle Skirt, Im	1
	14	1016399	(10000000- 20000000)	Screw, Hex, M8 X 1.25 X 30, Nl, Ss	1
	15	1211242	(10000000- 10791637)	Button, Plunger, Pad	1
	16	1212785	(10000000- 10791637)	Spring, Cmpr, .66od, .05wir, 1.75l, Ss	1
	17	1211907	(10000000- 10791637)	Pin, Stop, Short	1
	18	1020341	(10000000- 20000000)	Screw, Hex, M8 X 1.25 X 20, Ss, Sems	4
	19	1223980	(10802498- 20000000)	Plate Wldt, Head, Weighted	1
	20	1022549	(10000000- 20000000)	Spacer, Shaft, 17.15b 30.0d 3.0l, Ss	1
	21	1219855	(10791638- 20000000)	Hub, Drive, 3lug, Alm- Nyl, 17mm[T2,T300]	1
	22	1017218	(10000000- 20000000)	Washer, Flat, 0.32b 1.00d .12, Ss	1
	23	1020341	(10000000- 20000000)	Screw, Hex, M8 X 1.25 X 20, Ss, Sems	1
	24	1013188	(10748031- 20000000)	Clip, Spring, Drive Hub, Release [T3]	1
	25	1011201	(10748031- 20000000)	Plate, Drive Hub, Release Clip [T3]	1
	26	01683	(10748031- 10791637)	Washer, Flat, 10, Ss	2
	27	07514	(10748031- 10791637)	Washer, Lock, Int, 10, Ss	2
	28	09200	(10748031- 10791637)	Screw, Pan, Phl, M5 X 0.80 X 12, Ss	2
	29	1210590	(10000000- 10802497)	Plate Wldt, Head, Weighted (Replaced By Kit 9014801)	1
	30	1210676	(10000000- 10791637)	Hub, Drive, 3 Lug [Machined] (Replaced By Kit 9014623)	1
	31	140197	(10791638- 20000000)	Screw, Trs, Phl, 10- 24 X 0.38, Sems, Ss	2
	32	1221972	(10791638- 20000000)	Plug, Hole, Oval, Head, Hsng, Abs [T300]	1

∇ ASSEMBLY

▲ INCLUDED IN ASSEMBLY

SCRUB HEAD GROUP, 43CM DISK, MAGNETIC HUB

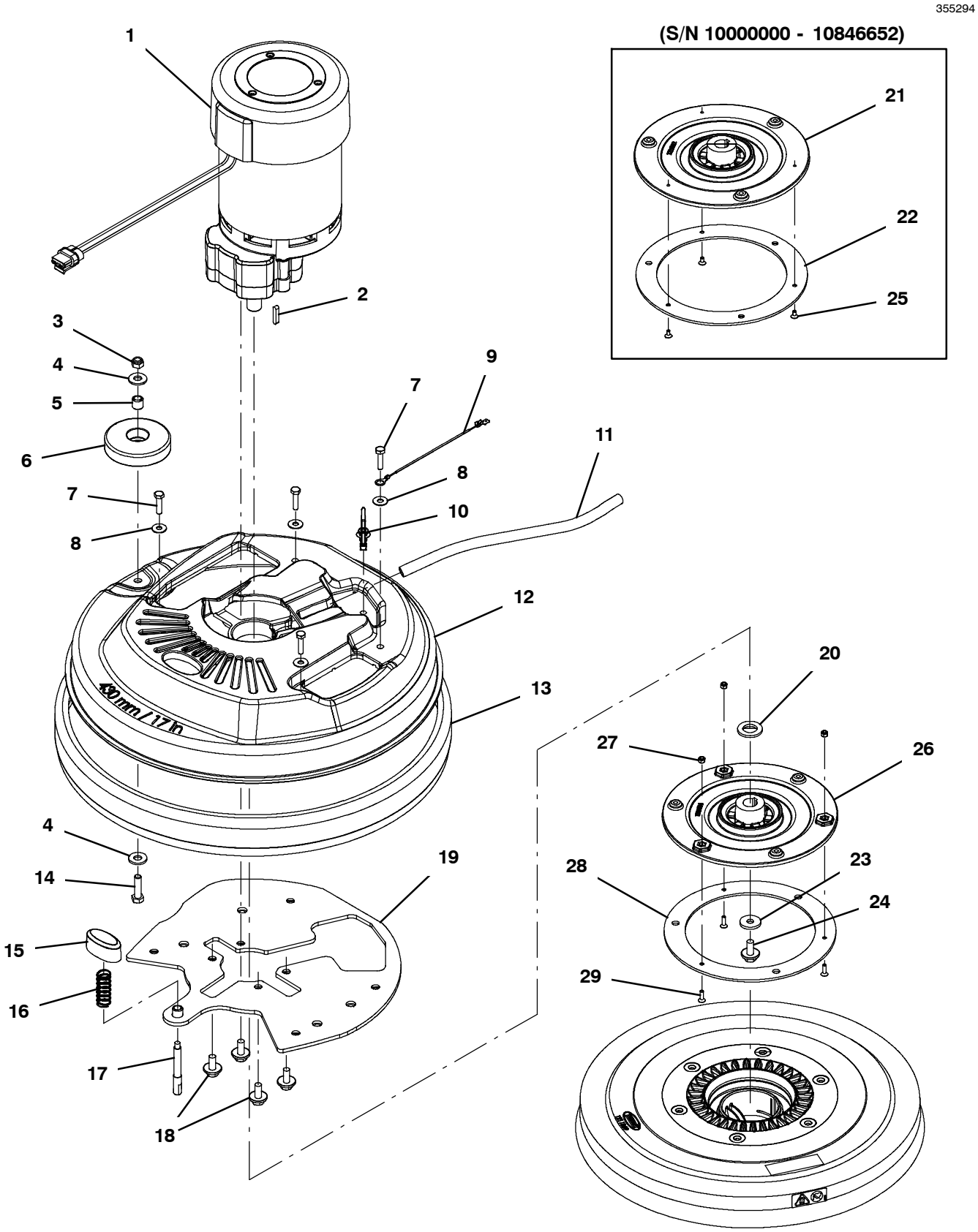

SCRUB HEAD GROUP, 43CM DISK, MAGNETIC HUB

	Ref.	Part No.	Serial Number	Description	Qty.
∇	1	1228117	(10978979- 20000000)	Motor, Ele, 24vdc 150rpm 0.68hp, 17mm	1
∇	1	1226976	(10834063- 10978978)	Motor, Ele, 24vdc 0215rpm 650w, 17mm	1
▲		1227273	(10834063- 20000000)	Vr, Brush Kit, Motor, Ele (4pc)	1
▲	2	1014328	(10000000- 20000000)	Key, Sq, 05mm X 05mm, 25mml	1
∇	1	1210703	(10000000- 10834062)	Motor, Ele, 24vdc 0200rpm 1.00hp, 17mm (Replaced By 9015159)	1
▲		222606	(10000000- 10834062)	Vr, Brush Kit, Motor, Ele [Ip] (4Pc) (For Imperial Motor - Frame #P56SG681)	1
▲		1045790	(10000000- 10834062)	Brush Kit, Replmt,Carbon 24vdc[1pk=1set](4Pc) (For Sanrong Motor - Frame #56S)	1
▲	2	1014328	(10000000- 20000000)	Key, Sq, 05mm X 05mm, 25mml	1
	3	08713	(10000000- 20000000)	Nut, Hex, Lock, M8 X 1.25, Nl, Ss	1
	4	01685	(10000000- 20000000)	Washer, Flat, 0.38b 0.88d .08, Ss	2
	5	222460	(10000000- 20000000)	Sleeve, P/M, 0.32b 0.50d 0.5l [430ss]	1
	6	1010560	(10000000- 20000000)	Wheel, Bmpr, 80d X 25w, Non- Marking	1
	7	1016005	(10000000- 20000000)	Screw, Hex, M6 X 1.00 X 25, Nl, Fl, Ss	4
	8	01684	(10000000- 20000000)	Washer, Flat, 0.27b 0.69d .05, Ss	4
	9	1074344	(10000000- 20000000)	Harness, Ele [Ring With .250m Tail]	1
	10	1210807	(10000000- 20000000)	Wire, Tie [W/.25” Fir Tree Clip]	1
	11	9014145	(10000000- 20000000)	Hose, Afmkt, Pe, .375id .50od, 05ft	1
	12	1212324	(10000000- 20000000)	Housing, Head, 43cm	1
	13	1055019	(10000000- 10978978)	Bumper, Head, 43cm, W/ Bristle Skirt, Im	1
	14	1016399	(10000000- 20000000)	Screw, Hex, M8 X 1.25 X 30, Nl, Ss	1
	15	1211242	(10000000- 20000000)	Button, Plunger, Pad	1
	16	1212785	(10000000- 20000000)	Spring, Cmpr, .66od, .05wir, 1.75l, Ss	1
	17	1211256	(10000000- 20000000)	Pin, Stop, Long	1
	18	1020341	(10000000- 20000000)	Screw, Hex, M8 X 1.25 X 20, Ss, Sems	4
	19	1223980	(10802498- 20000000)	Plate Wldt, Head, Weighted	1
	19	1210590	(10000000- 10802497)	Plate Wldt, Head, Weighted (Replaced By 9014801)	1
	20	1022549	(10000000- 20000000)	Spacer, Shaft, 17.15b 30.0d 3.0l, Ss	1
	21	1212312	(10000000- 10846652)	Hub, Drive, Magnetic [Machined] (Replaced By 9015184)	1
	22	1205043	(10000000- 20000000)	Ring, Hub, Magnetic	1
	23	1017218	(10000000- 20000000)	Washer, Flat, 0.32b 1.00d .12, Ss	1
	24	1020341	(10000000- 20000000)	Screw, Hex, M8 X 1.25 X 20, Ss, Sems	1
	25	630114	(10000000- 10846652)	Screw, Flt, Phl, M4 X 0.70 X 8, 4.8	3
∇		9015184	(10846653- 20000000)	Hub Kit, Drive, Magnetic [T300]	1
▲	26	1227654	(10846653- 20000000)	Hub, Drive, Magnetic [Machined]	1
▲	27	33932	(10846653- 2000000)	Nut, Hex, Lock, M4 X 0.70, Nl, Ss	2
▲	28	1205043	(10000000- 20000000)	Ring, Hub, Magnetic	1
▲	29	1227670	(10846653- 20000000)	Screw, Flt, Soc, M4 X 0.70 X 14,18- 8, Ss	3

∇ ASSEMBLY

▲ INCLUDED IN ASSEMBLY

SCRUB HEAD GROUP, 50CM DISK, 3- LUG HUB

355291

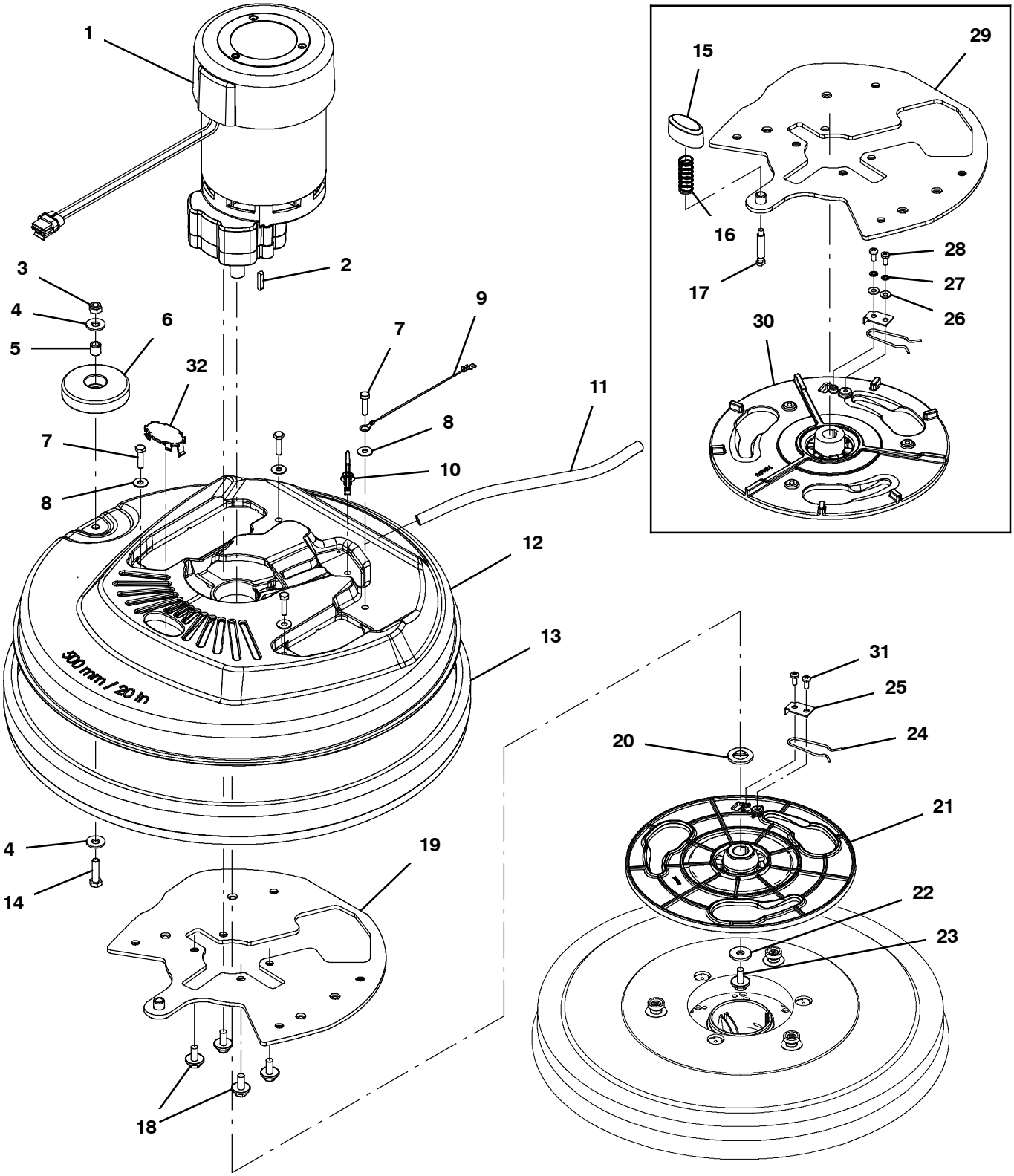

SCRUB HEAD GROUP, 50CM DISK, 3- LUG HUB

	Ref.	Part No.	Serial Number	Description	Qty.
∇	1	1228117	(10978979- 20000000)	Motor, Ele, 24vdc 150rpm 0.68hp, 17mm	1
∇	1	1226976	(10834387- 10978978)	Motor, Ele, 24vdc 0215rpm 650w, 17mm	1
▲		1227273	(10834387- 20000000)	Vr, Brush Kit, Motor, Ele (4pc)	1
▲	2	1014328	(10000000- 20000000)	Key, Sq, 05mm X 05mm, 25mml	1
∇	1	1210703	(10000000- 10834386)	Motor, Ele, 24vdc 0200rpm 1.00hp, 17mm (Replaced By 9015159)	1
▲		222606	(10000000- 10834386)	Vr, Brush Kit, Motor, Ele [Ip] (4Pc) (For Imperial Motor - Frame #P56SG681)	1
▲		1045790	(10000000- 10834386)	Brush Kit, Replmt,Carbon 24vdc[1pk=1set](4Pc) (For Sanrong Motor - Frame #56S)	1
▲	2	1014328	(10000000- 20000000)	Key, Sq, 05mm X 05mm, 25mml	1
	3	08713	(10000000- 20000000)	Nut, Hex, Lock, M8 X 1.25, Nl, Ss	1
	4	01685	(10000000- 20000000)	Washer, Flat, 0.38b 0.88d .08, Ss	2
	5	222460	(10000000- 20000000)	Sleeve, P/M, 0.32b 0.50d 0.5l [430ss]	1
	6	1010560	(10000000- 20000000)	Wheel, Bmpr, 80d X 25w, Non- Marking	1
	7	1016005	(10000000- 20000000)	Screw, Hex, M6 X 1.00 X 25, Nl, Fl, Ss	4
	8	01684	(10000000- 20000000)	Washer, Flat, 0.27b 0.69d .05, Ss	4
	9	1074344	(10000000- 20000000)	Harness, Ele [Ring With .250m Tail]	1
	10	1210807	(10000000- 20000000)	Wire, Tie [W/.25” Fir Tree Clip]	1
	11	9014145	(10000000- 20000000)	Hose, Afmkt, Pe, .375id .50od, 05ft	1
	12	1208041	(10000000- 20000000)	Housing, Head, 50cm	1
	13	1055025	(10000000- 10978978)	Bumper, Head, 50cm, W/ Bristle Skirt, Im	1
	14	1016399	(10000000- 20000000)	Screw, Hex, M8 X 1.25 X 30, Nl, Ss	1
	15	1211242	(10000000- 10791637)	Button, Plunger, Pad	1
	16	1212785	(10000000- 10791637)	Spring, Cmpr, .66od, .05wir, 1.75l, Ss	1
	17	1211907	(10000000- 10791637)	Pin, Stop, Short	1
	18	1020341	(10000000- 20000000)	Screw, Hex, M8 X 1.25 X 20, Ss, Sems	4
	19	1223980	(10499417- 20000000)	Plate Wldt, Head, Weighted	1
	20	1022549	(10000000- 20000000)	Spacer, Shaft, 17.15b 30.0d 3.0l, Ss	1
	21	1219855	(10791638- 20000000)	Hub, Drive, 3lug, Alm- Nyl, 17mm[T2,T300]	1
	22	1017218	(10000000- 20000000)	Washer, Flat, 0.32b 1.00d .12, Ss	1
	23	1020341	(10000000- 20000000)	Screw, Hex, M8 X 1.25 X 20, Ss, Sems	1
	24	1013188	(10748031- 20000000)	Clip, Spring, Drive Hub, Release [T3]	1
	25	1011201	(10748031- 20000000)	Plate, Drive Hub, Release Clip [T3]	1
	26	01683	(10748031- 10791637)	Washer, Flat, 10, Ss	2
	27	07514	(10748031- 10791637)	Washer, Lock, Int, 10, Ss	2
	28	09200	(10748031- 10791637)	Screw, Pan, Phl, M5 X 0.80 X 12, Ss	2
	29	1210590	(10000000- 10499416)	Plate Wldt, Head, Weighted (Replaced By Kit 9014801)	1
	30	1210676	(10000000- 10791637)	Hub, Drive, 3 Lug [Machined] (Replaced By Kit 9014623)	1
	31	140197	(10791638- 20000000)	Screw, Trs, Phl, 10- 24 X 0.38, Sems, Ss	2
	32	1221972	(10791638- 20000000)	Plug, Hole, Oval, Head, Hsng, Abs [T300]	1

∇ ASSEMBLY

▲ INCLUDED IN ASSEMBLY

SCRUB HEAD GROUP, 50CM DISK, MAGNETIC HUB

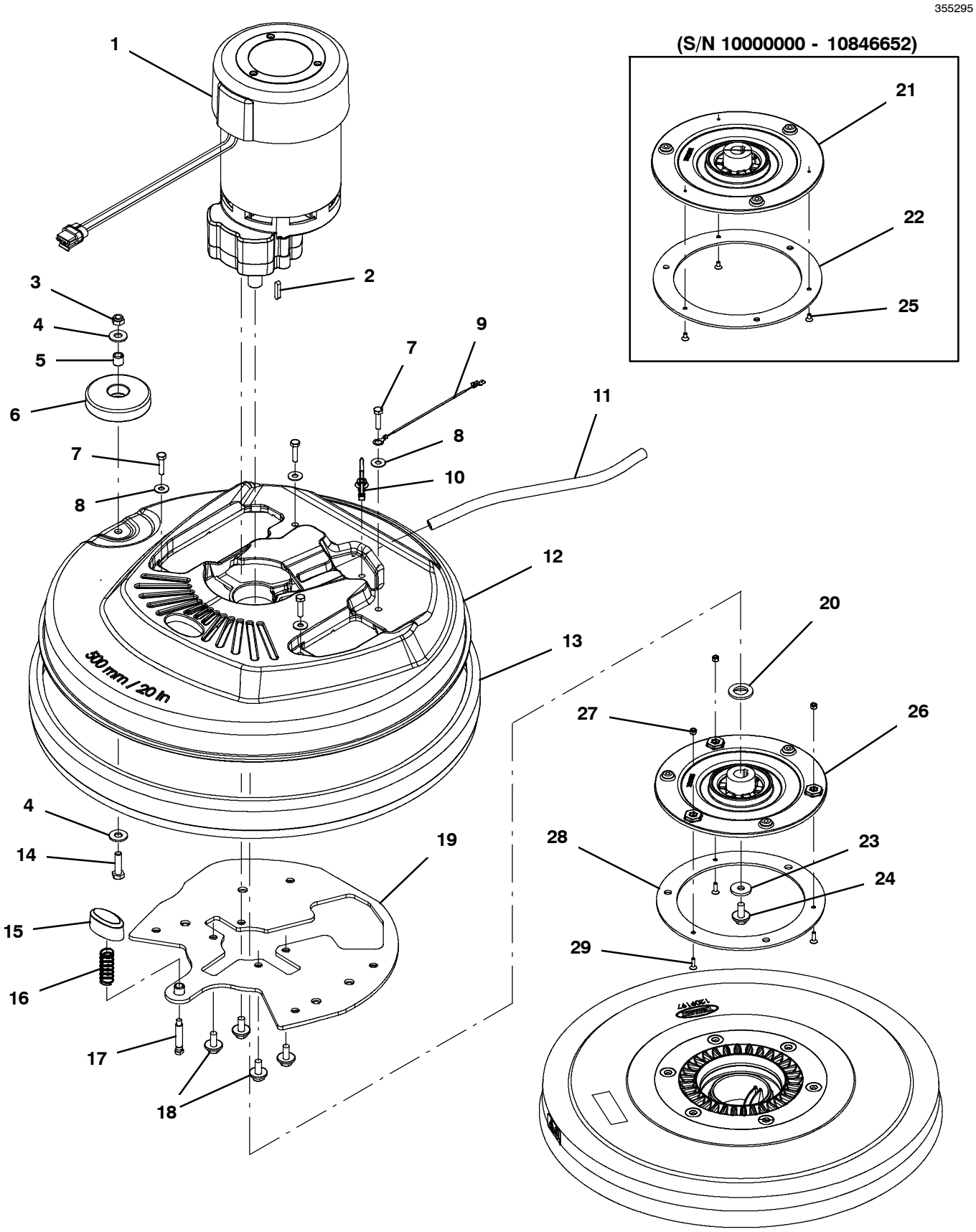

SCRUB HEAD GROUP, 50CM DISK, MAGNETIC HUB

	Ref.	Part No.	Serial Number	Description	Qty.
∇	1	1228117	(10978979- 20000000)	Motor, Ele, 24vdc 150rpm 0.68hp, 17mm	1
∇	1	1226976	(10834387- 10978978)	Motor, Ele, 24vdc 0215rpm 650w, 17mm	1
▲		1227273	(10834387- 20000000)	Vr, Brush Kit, Motor, Ele (4pc)	1
▲	2	1014328	(10000000- 20000000)	Key, Sq, 05mm X 05mm, 25mml	1
∇	1	1210703	(10000000- 10834386)	Motor, Ele, 24vdc 0200rpm 1.00hp, 17mm (Replaced By 9015159)	1
▲		222606	(10000000- 10834386)	Vr, Brush Kit, Motor, Ele [Ip] (4Pc) (For Imperial Motor - Frame #P56SG681)	1
▲		1045790	(10000000- 10834386)	Brush Kit, Replmt,Carbon 24vdc[1pk=1set](4Pc) (For Sanrong Motor - Frame #56S)	1
▲	2	1014328	(10000000- 20000000)	Key, Sq, 05mm X 05mm, 25mml	1
	3	08713	(10000000- 20000000)	Nut, Hex, Lock, M8 X 1.25, Nl, Ss	1
	4	01685	(10000000- 20000000)	Washer, Flat, 0.38b 0.88d .08, Ss	2
	5	222460	(10000000- 20000000)	Sleeve, P/M, 0.32b 0.50d 0.5l [430ss]	1
	6	1010560	(10000000- 20000000)	Wheel, Bmpr, 80d X 25w, Non- Marking	1
	7	1016005	(10000000- 20000000)	Screw, Hex, M6 X 1.00 X 25, Nl, Fl, Ss	4
	8	01684	(10000000- 20000000)	Washer, Flat, 0.27b 0.69d .05, Ss	4
	9	1074344	(10000000- 20000000)	Harness, Ele [Ring With .250m Tail]	1
	10	1210807	(10000000- 20000000)	Wire, Tie [W/.25” Fir Tree Clip]	1
	11	9014145	(10000000- 20000000)	Hose, Afmkt, Pe, .375id .50od, 05ft	1
	12	1208041	(10000000- 20000000)	Housing, Head, 50cm	1
	13	1055025	(10000000- 10978978)	Bumper, Head, 50cm, W/ Bristle Skirt, Im	1
	14	1016399	(10000000- 20000000)	Screw, Hex, M8 X 1.25 X 30, Nl, Ss	1
	15	1211242	(10000000- 20000000)	Button, Plunger, Pad	1
	16	1212785	(10000000- 20000000)	Spring, Cmpr, .66od, .05wir, 1.75l, Ss	1
	17	1211256	(10000000- 20000000)	Pin, Stop, Long	1
	18	1020341	(10000000- 20000000)	Screw, Hex, M8 X 1.25 X 20, Ss, Sems	4
	19	1223980	(10499417- 20000000)	Plate Wldt, Head, Weighted	1
	19	1210590	(10000000- 10499416)	Plate Wldt, Head, Weighted (Replaced By Kit 9014801)	1
	20	1022549	(10000000- 20000000)	Spacer, Shaft, 17.15b 30.0d 3.0l, Ss	1
	21	1212312	(10000000- 10846652)	Hub, Drive, Magnetic [Machined] (Replaced By 9015184)	1
	22	1205043	(10000000- 20000000)	Ring, Hub, Magnetic	1
	23	1017218	(10000000- 20000000)	Washer, Flat, 0.32b 1.00d .12, Ss	1
	24	1020341	(10000000- 20000000)	Screw, Hex, M8 X 1.25 X 20, Ss, Sems	1
	25	630114	(10000000- 10846652)	Screw, Flt, Phl, M4 X 0.70 X 8, 4.8	3
∇		9015184	(10846653- 20000000)	Hub Kit, Drive, Magnetic [T300]	1
▲	26	1227654	(10846653- 20000000)	Hub, Drive, Magnetic [Machined]	1
▲	27	33932	(10846653- 2000000)	Nut, Hex, Lock, M4 X 0.70, Nl, Ss	2
▲	28	1205043	(10000000- 20000000)	Ring, Hub, Magnetic	1
▲	29	1227670	(10846653- 20000000)	Screw, Flt, Soc, M4 X 0.70 X 14,18- 8, Ss	3

∇ ASSEMBLY

▲ INCLUDED IN ASSEMBLY

SCRUB HEAD GROUP, 60CM DUAL DISK, 3- LUG HUB

355292

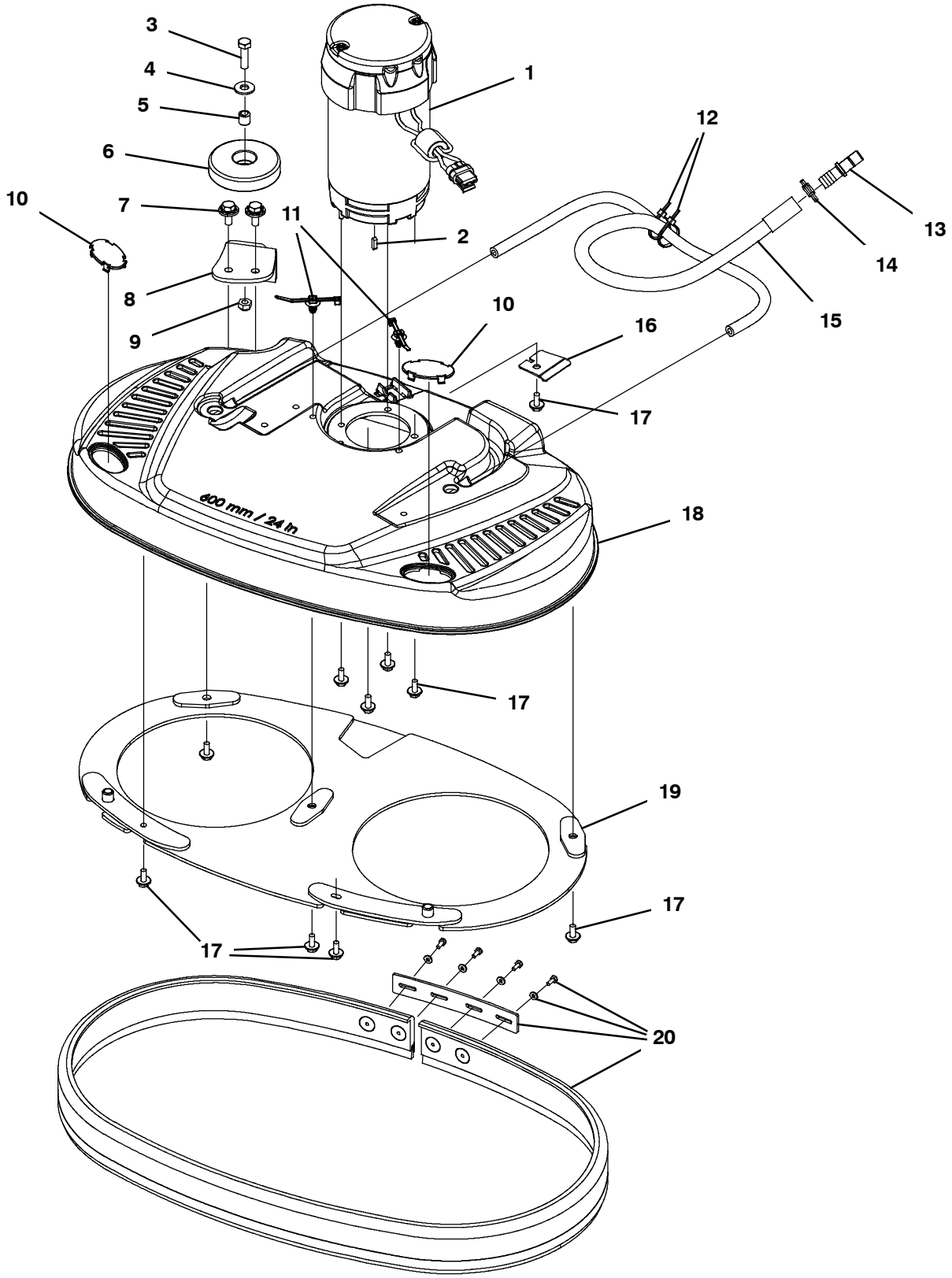

SCRUB HEAD GROUP, 60CM DUAL DISK, 3- LUG HUB

	Ref.	Part No.	Serial Number	Description	Qty.
∇	1	1227280	(10835154- 20000000)	Motor, 24vdc, 2000rpm, 7/8hp	1
▲		1059370	(10000000- 20000000)	Brush, Motor, Replmt [Bag Of 4)	1
▲	2	1217769	(10000000- 20000000)	Key, Sq, 04mm X 04mm, 15mml	1
∇	1	1210212	(10000000- 10835153)	Motor, 24vdc, 2000rpm, 7/8hp, Us (Replaced By 9015160)	1
▲		1059370	(10000000- 20000000)	Brush, Motor, Replmt [Bag Of 4)	1
▲	2	1217769	(10000000- 20000000)	Key, Sq, 04mm X 04mm, 15mml	1
	3	09011	(10000000- 20000000)	Screw, Hex, M8 X 1.25 X 30, Ss	1
	4	01685	(10000000- 20000000)	Washer, Flat, 0.38b 0.88d .08, Ss	1
	5	222460	(10000000- 20000000)	Sleeve, P/M, 0.32b 0.50d 0.5l [430ss]	1
	6	1010560	(10000000- 20000000)	Wheel, Bmpr, 80d X 25w, Non- Marking	1
	7	1020341	(10000000- 20000000)	Screw, Hex, M8 X 1.25 X 20, Ss, Sems	2
	8	1211506	(10000000- 20000000)	Bracket, Rlr, Wall, Scb Head	1
	9	08713	(10000000- 20000000)	Nut, Hex, Lock, M8 X 1.25, Nl, Ss	1
	10	1221972	(10000000- 20000000)	Plug, Hole, Oval, Head, Hsng, Abs [T300]	2
	11	1210807	(10000000- 20000000)	Wire, Tie [W/.25” Fir Tree Clip]	2
	12	130773	(10000000- 20000000)	Tie, Cable, Nyl, 11.0l, .14w, 3.0 Max. D	2
	13	1212807	(10000000- 20000000)	Fitting, Plstc, Str, Qm08/Bm08	1
	14	607776	(10000000- 20000000)	Clamp, Hose, Wir, .73 - .77, Silver	1
	15	1216084	(10000000- 20000000)	Manifold, Distribution, Water, 60dd [Vw]	1
	16	1217752	(10000000- 20000000)	Bracket, Belt Guide	1
	17	1034731	(10000000- 20000000)	Screw, Hex, M6 X 1.00 X 16, Sems, Ss	10
	18	1211027	(10000000- 20000000)	Housing, Head, 60cm [Machined]	1
	19	1216346	(10000000- 20000000)	Bracket Wldt, Guard, Splash, 60cm	1
	20	9011849	(10000000- 20000000)	Bumper, Head, 60cm, Bristle Skirt	1

∇ ASSEMBLY

▲ INCLUDED IN ASSEMBLY

SCRUB HEAD GROUP, 60CM DUAL DISK, 3- LUG HUB - CONT'D

355335

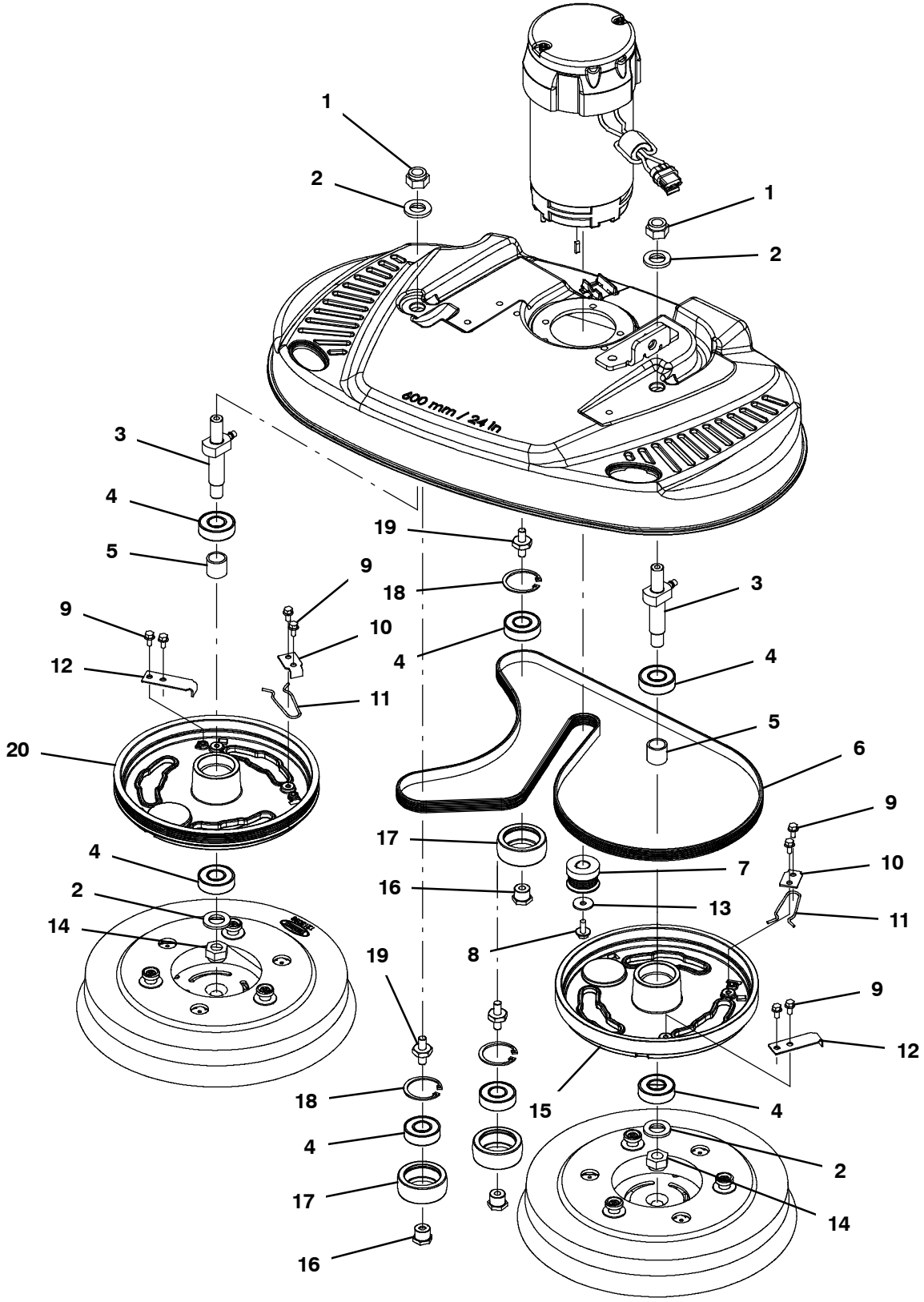

SCRUB HEAD GROUP, 60CM DUAL DISK, 3- LUG HUB - CONT'D

Ref.	Part No.	Serial Number	Description	Qty.
1	41517	(10000000- 20000000)	Nut, Hex, Lock, M14 X 2.00, Nl	2
2	1022549	(10000000- 20000000)	Spacer, Shaft, 17.15b 30.0d 3.0l, Ss	4
3	1214206	(10000000- 20000000)	Shaft Wldt, Mtg, Pulley	2
4	1211187	(10000000- 20000000)	Bearing, Ball, 0.67b 1.57d 0.47w [6203]	7
5	1011041	(10000000- 20000000)	Tube, 0.69id 0.87od 00.8l, Stl, Pl	2
6	1055305	(10000000- 20000000)	Belt, Drive, 6pj, Ej139 [T3]	1
7	1213927	(10000000- 20000000)	Sheave, 06grv, 1.25pd 0.54b, Ss [Keyed]	1
8	1034731	(10000000- 20000000)	Screw, Hex, M6 X 1.00 X 16, Sems, Ss	1
9	223198	(10000000- 20000000)	Screw, Hex, M5 X 0.80 X 10, Fmg	8
10	1011201	(10000000- 20000000)	Plate, Drive Hub, Release Clip [T3]	2
11	1013188	(10000000- 20000000)	Clip, Spring, Drive Hub, Release [T3]	2
12	1013592	(10000000- 20000000)	Plate, Drive Hub, Release Stop [T3 Dd]	2
13	019680127	(10000000- 20000000)	Washer, Flat, 6.2mm Id X 22.0mm Od X 1.9	1
14	41517	(10000000- 20000000)	Nut, Hex, Lock, M14 X 2.00, Nl	2
15	1059205	(10000000- 20000000)	Hub, Drive, 3lug, Alm, 2disk, Flt	1
16	1011008	(10000000- 20000000)	Spacer, Brg, Idler	3
17	1058514	(10000000- 20000000)	Pulley, Idler, 55d X 21w[60cm Dual Disk]	3
18	1013884	(10000000- 20000000)	Ring, Retaining, Int, 40mm, Ss	3
19	1211624	(10000000- 20000000)	Stud, M8 X 1.25, Dbl End W/Hex, Ss	3
20	1059206	(10000000- 20000000)	Hub, Drive, 3lug, Alm, 2disk, 6grv	1

SCRUB HEAD GROUP, 60CM DUAL DISK, MAGNETIC HUB

355296

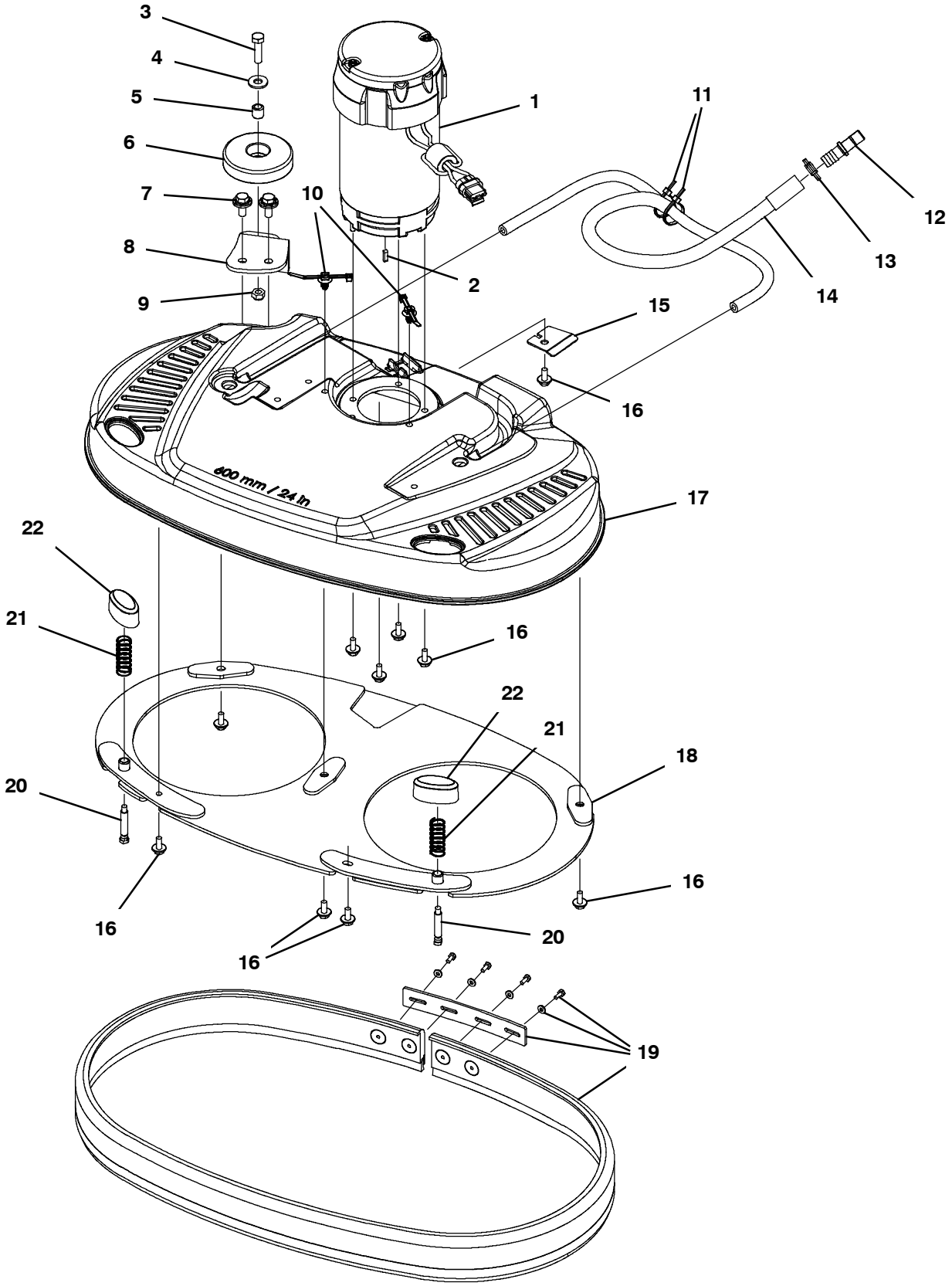

SCRUB HEAD GROUP, 60CM DUAL DISK, MAGNETIC HUB

	Ref.	Part No.	Serial Number	Description	Qty.
∇	1	1227280	(10835154- 20000000)	Motor, 24vdc, 2000rpm, 7/8hp	1
▲		1059370	(10000000- 20000000)	Brush, Motor, Replmt [Bag Of 4)	1
▲	2	1217769	(10000000- 20000000)	Key, Sq, 04mm X 04mm, 15mml	1
∇	1	1210212	(10000000- 10835153)	Motor, 24vdc, 2000rpm, 7/8hp, Us (Replaced By 9015160)	1
▲		1059370	(10000000- 20000000)	Brush, Motor, Replmt [Bag Of 4)	1
▲	2	1217769	(10000000- 20000000)	Key, Sq, 04mm X 04mm, 15mml	1
	3	09011	(10000000- 20000000)	Screw, Hex, M8 X 1.25 X 30, Ss	1
	4	01685	(10000000- 20000000)	Washer, Flat, 0.38b 0.88d .08, Ss	1
	5	222460	(10000000- 20000000)	Sleeve, P/M, 0.32b 0.50d 0.5l [430ss]	1
	6	1010560	(10000000- 20000000)	Wheel, Bmpr, 80d X 25w, Non- Marking	1
	7	1020341	(10000000- 20000000)	Screw, Hex, M8 X 1.25 X 20, Ss, Sems	2
	8	1211506	(10000000- 20000000)	Bracket, Rlr, Wall, Scb Head	1
	9	08713	(10000000- 20000000)	Nut, Hex, Lock, M8 X 1.25, Nl, Ss	1
	10	1210807	(10000000- 20000000)	Wire, Tie [W/.25” Fir Tree Clip]	2
	11	130773	(10000000- 20000000)	Tie, Cable, Nyl, 11.0l, .14w, 3.0 Max. D	2
	12	1212807	(10000000- 20000000)	Fitting, Plstc, Str, Qm08/Bm08	1
	13	607776	(10000000- 20000000)	Clamp, Hose, Wir, .73 - .77, Silver	1
	14	1216084	(10000000- 20000000)	Manifold, Distribution, Water, 60dd [Vw]	1
	15	1217752	(10000000- 20000000)	Bracket, Belt Guide	1
	16	1034731	(10000000- 20000000)	Screw, Hex, M6 X 1.00 X 16, Sems, Ss	10
	17	1211027	(10000000- 20000000)	Housing, Head, 60cm [Machined]	1
	18	1216346	(10000000- 20000000)	Bracket Wldt, Guard, Splash, 60cm	1
	19	9011849	(10000000- 20000000)	Bumper, Head, 60cm, Bristle Skirt	1
	20	1211907	(10000000- 20000000)	Pin, Stop, Short	2
	21	1212785	(10000000- 20000000)	Spring, Cmpr, .66od, .05wir, 1.75l, Ss	2
	22	1211242	(10000000- 20000000)	Button, Plunger, Pad	2

∇ ASSEMBLY

▲ INCLUDED IN ASSEMBLY

SCRUB HEAD GROUP, 60CM DUAL DISK, MAGNETIC HUB - CONT'D

355336

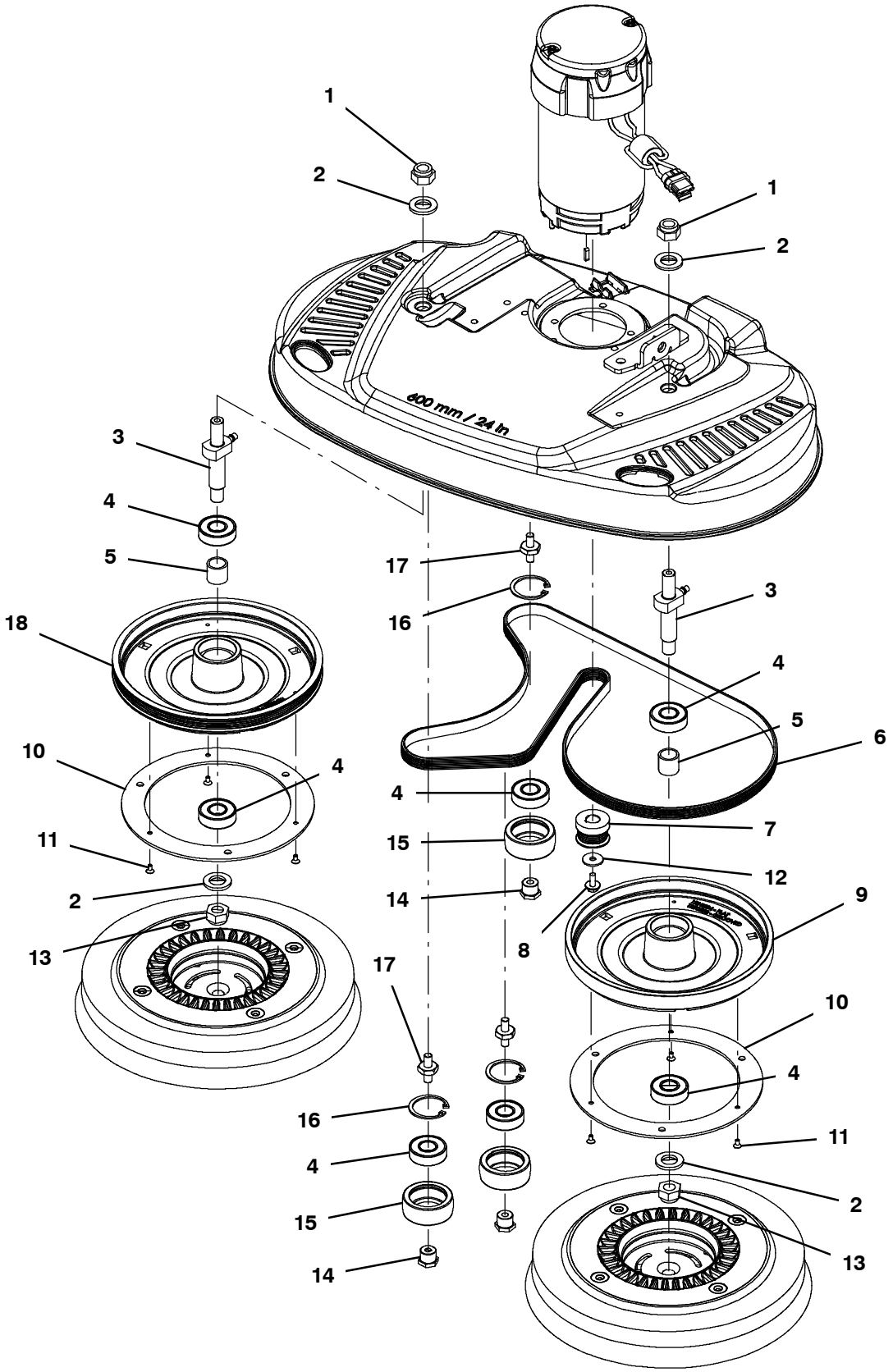

SCRUB HEAD GROUP, 60CM DUAL DISK, MAGNETIC HUB - CONT'D

Ref.	Part No.	Serial Number	Description	Qty.
1	41517	(10000000- 20000000)	Nut, Hex, Lock, M14 X 2.00, Nl	2
2	1022549	(10000000- 20000000)	Spacer, Shaft, 17.15b 30.0d 3.0l, Ss	4
3	1214206	(10000000- 20000000)	Shaft Wldt, Mtg, Pulley	2
4	1211187	(10000000- 20000000)	Bearing, Ball, 0.67b 1.57d 0.47w [6203]	7
5	1011041	(10000000- 20000000)	Tube, 0.69id 0.87od 00.8l, Stl, Pl	2
6	1055305	(10000000- 20000000)	Belt, Drive, 6pj, Ej139 [T3]	1
7	1213927	(10000000- 20000000)	Sheave, 06grv, 1.25pd 0.54b, Ss [Keyed]	1
8	1034731	(10000000- 20000000)	Screw, Hex, M6 X 1.00 X 16, Sems, Ss	1
9	1210504	(10000000- 20000000)	Hub, Drive, Magnetic, Flat, 60cm Dd	1
10	1205043	(10000000- 20000000)	Ring, Hub, Magnetic	2
11	630114	(10000000- 20000000)	Screw, Flt, Phl, M4 X 0.70 X 8, 4.8	6
12	019680127	(10000000- 20000000)	Washer, Flat, 6.2mm Id X 22.0mm Od X 1.9	1
12	41517	(10000000- 20000000)	Nut, Hex, Lock, M14 X 2.00, Nl	2
14	1011008	(10000000- 20000000)	Spacer, Brg, Idler	3
15	1058514	(10000000- 20000000)	Pulley, Idler, 55d X 21w[60cm Dual Disk]	3
16	1013884	(10000000- 20000000)	Ring, Retaining, Int, 40mm, Ss	3
17	1211624	(10000000- 20000000)	Stud, M8 X 1.25, Dbl End W/Hex, Ss	3
18	1210503	(10000000- 20000000)	Hub, Drive, Magnetic, Grooved, 60cm Dd	1

SCRUB HEAD GROUP, 50CM CYLINDRICAL

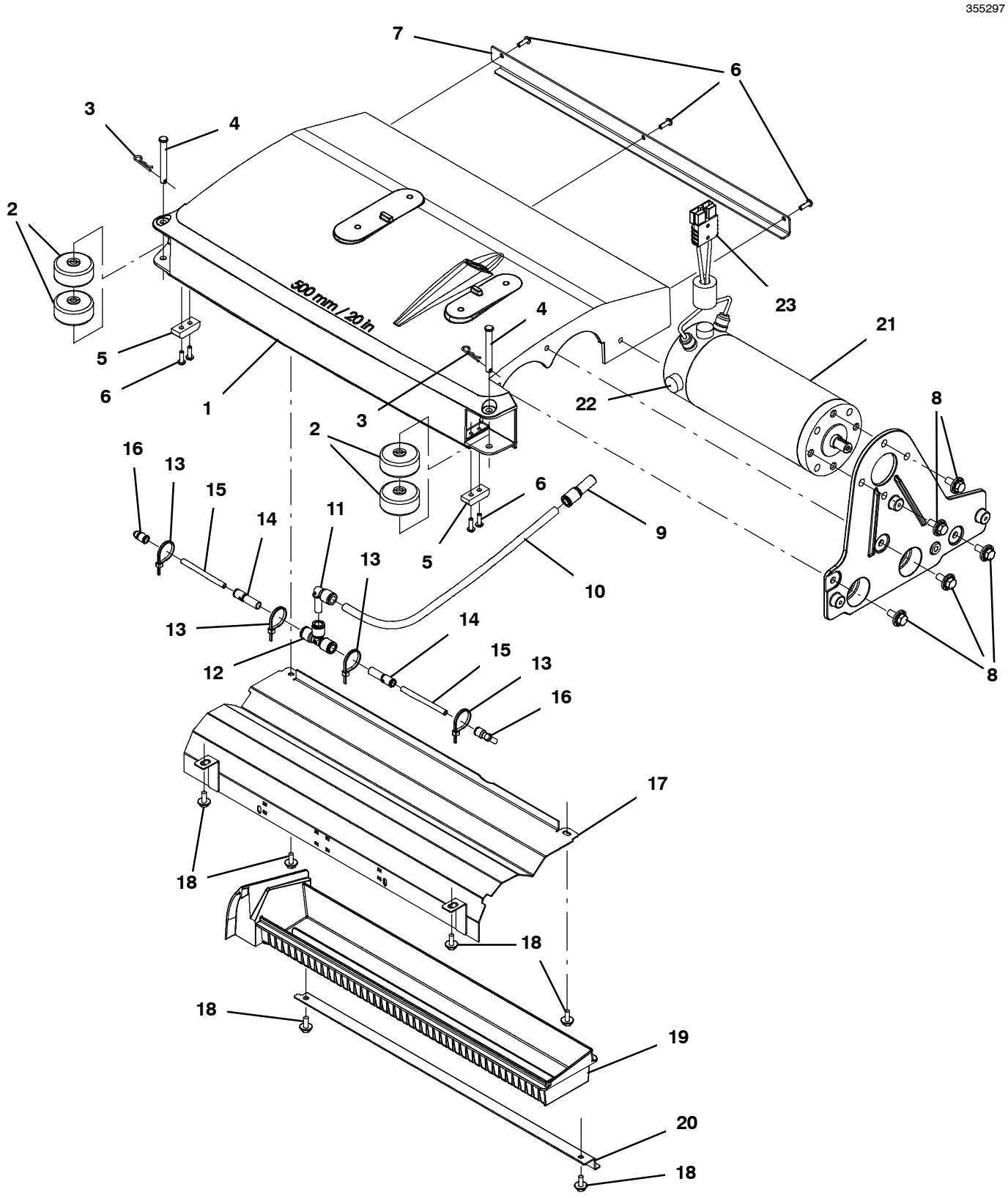

SCRUB HEAD GROUP, 50CM CYLINDRICAL

	Ref.	Part No.	Serial Number	Description	Qty.
	1	1212265	(10000000- 20000000)	Housing, Brush, Dbl 50cm [Machined]	1
	2	630477	(10000000- 20000000)	Wheel, Pyu, 02.0d 0.38w, Gray	4
	3	1216647	(10000000- 20000000)	Pin, Cotter, Hair, 0.38d .054 Wir	2
	4	391179	(10000000- 20000000)	Pin, Clevis, 0.37d X 2.62l	2
	5	1215675	(10000000- 20000000)	Skid, Brush Housing	2
	6	1205799	(10000000- 20000000)	Screw, Btn, M5 X 0.8 X 16, 8.8, Nl, Torx	7
	7	1213708	(10000000- 20000000)	Bracket, Tray, Debris	1
	8	1020341	(10000000- 20000000)	Screw, Hex, M8 X 1.25 X 20, Ss, Sems	7
	9	1215218	(10000000- 20000000)	Fitting, Plstc, Str, Qf06/Qm08	1
	10	1014986	(10000000- 20000000)	Hose, Afmkt, Pvc, Clr, 0.25id, 02ft	1
	11	1215186	(10000000- 20000000)	Fitting, Plstc, E90, Qf06/Qm06	1
	12	1212573	(10000000- 20000000)	Fitting, Plstc, Tee, Qf06/Qf06/Qf06	1
	13	130773	(10000000- 20000000)	Tie, Cable, Nyl, 11.0l, .14w, 3.0 Max. D	4
	14	1212934	(10000000- 20000000)	Fitting, Plstc, Str, Qf04/Qm06	2
	15	160827	(10000000- 20000000)	Hose, Pvc, Clr, 0.12id 0.25od 010.5l	1
	16	1214339	(10000000- 20000000)	Fitting, Plstc, E90, Qfo4/Qm04	2
	17	1219486	(10000000- 20000000)	Panel Wldt, Brush	1
	18	1034731	(10000000- 20000000)	Screw, Hex, M6 X 1.00 X 16, Sems, Ss	6
	19	1213706	(10000000- 20000000)	Tray, Debris, 500mm [Im]	1
	20	1213707	(10000000- 20000000)	Bracket, Tray, Debris	1
∇	21	1210202	(10000000- 20000000)	Motor, Ele, 24vdc [Vw Cyl]	1
▲		1217769	(10000000- 20000000)	Key, Sq, 04mm X 04mm, 15mml	1
▲	22	1059370	(10000000- 20000000)	Brush, Motor, Replmt [Bag Of 4)	1
▲	23	49548	(10000000- 20000000)	Connector, Anderson, 050a, Red	1

∇ ASSEMBLY

▲ INCLUDED IN ASSEMBLY

SCRUB HEAD GROUP, 50CM CYLINDRICAL - CONT'D

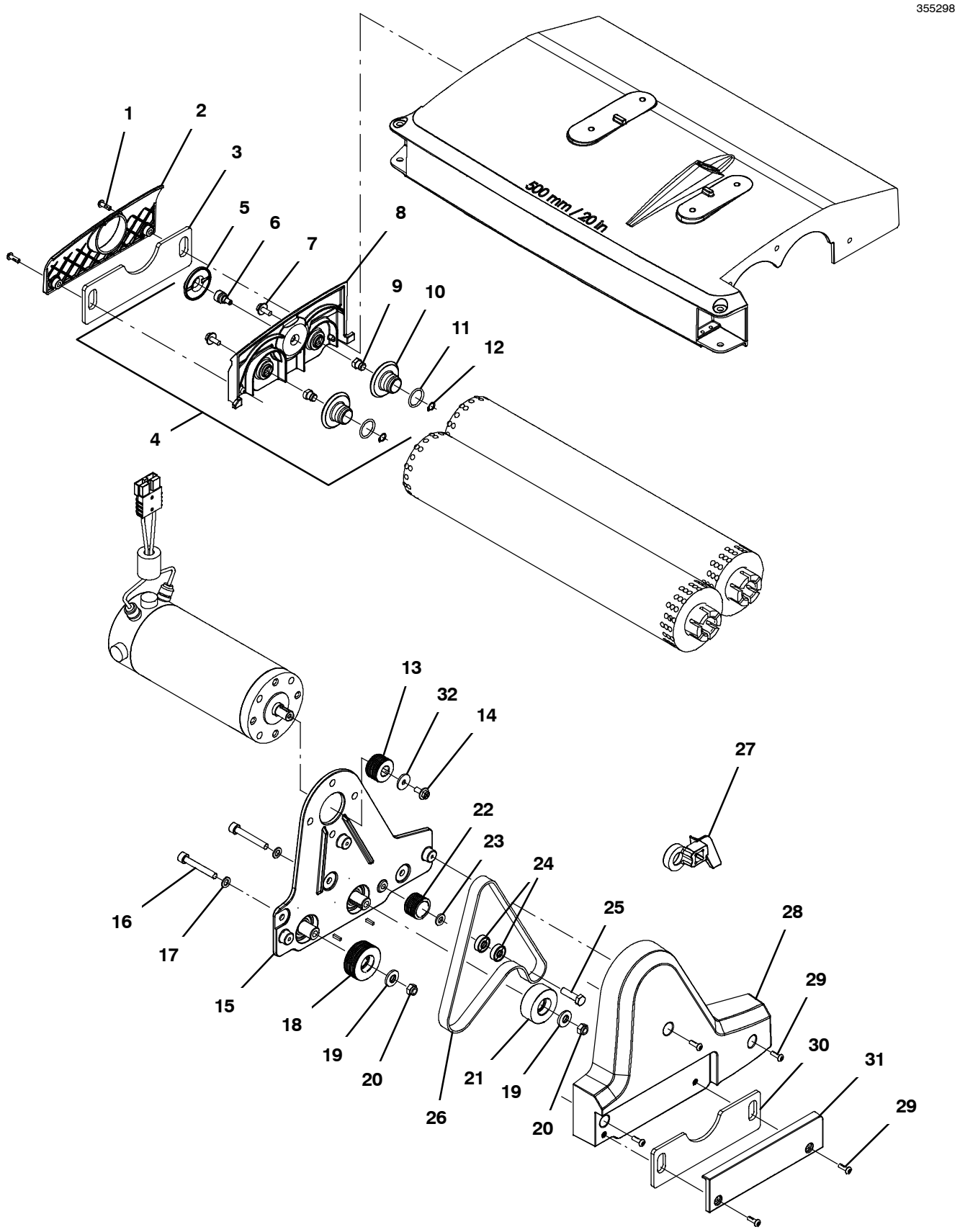

SCRUB HEAD GROUP, 50CM CYLINDRICAL - CONT'D

	Ref.	Part No.	Serial Number	Description	Qty.
	1	1205799	(10000000- 20000000)	Screw, Btn, M5 X 0.8 X 16, 8.8, Nl, Torx	2
	2	1216689	(10000000- 20000000)	Cover, Skirt, Cyl Door	1
	3	1215666	(10000000- 20000000)	Skirt, Side, Cyl, Floating	1
∇	4	9014168	(10000000- 20000000)	Door Assy, Brush	1
▲	5	1215581	(10000000- 20000000)	Cap, Screw	1
▲	6	1062149	(10000000- 20000000)	Knob, Rnd, 0.58d 0.50l, .25- 20x.50l Stud	1
▲	7	1034731	(10000000- 20000000)	Screw, Hex, M6 X 1.00 X 16, Sems, Ss	2
▲	8	1212250	(10000000- 20000000)	Door, Brush [Machined]	1
▲	9	1030682	(10000000- 20000000)	Shaft, Idler Plug	2
▲	10	1030680	(10000000- 20000000)	Hub, Idler, Brush	2
▲	11	1220596	(10000000- 20000000)	Seal, Org, .139 X .859 Id, 212	2
▲	12	01543	(10000000- 20000000)	Ring, Retaining, Ext, 0.39d, Basic	2
	13	1210116	(10000000- 20000000)	Sheave, Motor, 07grv 1.3pd 0.50b [Pj]	1
	14	1034731	(10000000- 20000000)	Screw, Hex, M6 X 1.00 X 16, Sems, Ss	1
∇	15	9014167	(10000000- 20000000)	Brkt Assy, Motor, Sgl Mount (Also includes Hubs, Bearings and Seals Not Available Separately)	1
▲	16	1057476	(10000000- 20000000)	Screw, Soc, M8 X 1.25 X 55, Ss	2
▲	17	1057482	(10000000- 20000000)	Washer, Flat, 0.33b 0.57d 0.06, Ss	2
▲	18	1210204	(10000000- 20000000)	Sheave, Drive, Grvd 07grv, 2.0pd 0.67b [	1
▲	19	41186	(10000000- 20000000)	Washer, Flat, Belleville, .31	2
▲	20	08713	(10000000- 20000000)	Nut, Hex, Lock, M8 X 1.25, Nl, Ss	2
▲	21	1210232	(10000000- 20000000)	Sheave, Drive, Smooth 2.0pd 0.67b	1
▲	22	1210233	(10000000- 20000000)	Sheave, Idler, 07grv 1.2pd 0.87b [Pj]	1
▲	23	1216289	(10000000- 20000000)	Spacer, Pulley, 2cyl, Pm [Vw]	1
▲	24	1027651	(10000000- 20000000)	Bearing, Ball, 8mmb X 22mmd X 7mmw	2
▲	25	1016399	(10000000- 20000000)	Screw, Hex, M8 X 1.25 X 30, Nl, Ss	1
▲∇		9014166	(10000000- 20000000)	Kit, Belt, Motor (Includes Belt & Installation Tool)	1
▲▲	26	1209587	(10000000- 20000000)	Belt, Motor [Vw Single Motor]	1
▲▲	27	1213132	(10000000- 20000000)	Tool, Installation, Belt	1
	28	1209594	(10000000- 20000000)	Cover, Belt	1
	29	1205799	(10000000- 20000000)	Screw, Btn, M5 X 0.8 X 16, 8.8, Nl, Torx	5
	30	1215666	(10000000- 20000000)	Skirt, Side, Cyl, Floating	1
	31	1216728	(10000000- 20000000)	Cover, Skirt, Cyl Head	1
	32	019680127	(10000000- 20000000)	Washer, Flat, 6.2mm Id X 22.0mm Od X 1.9	1

∇ ASSEMBLY

▲ INCLUDED IN ASSEMBLY

SCRUB HEAD GROUP, 50CM ORBITAL

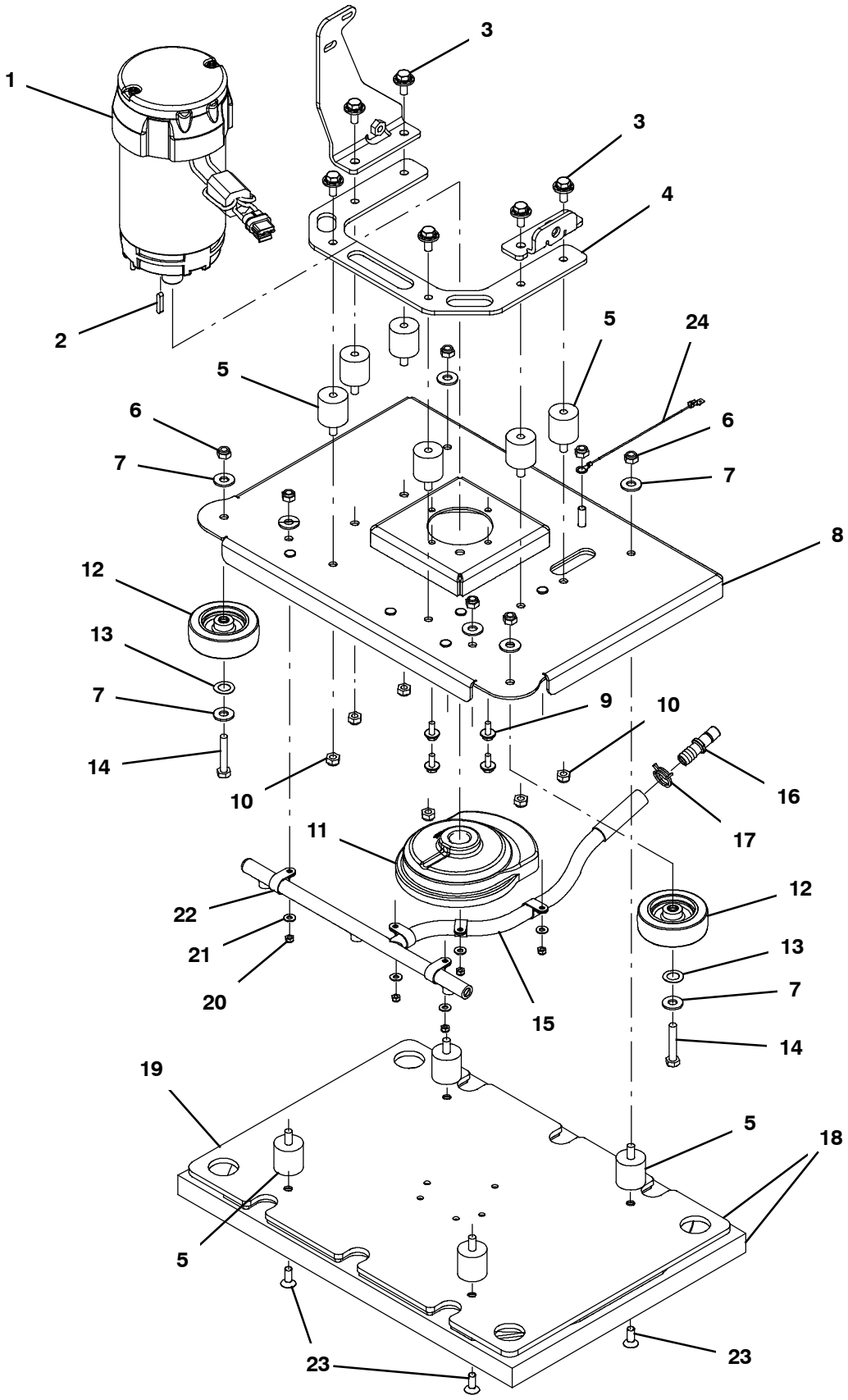

SCRUB HEAD GROUP, 50CM ORBITAL

	Ref.	Part No.	Serial Number	Description	Qty.
∇	1	1226909	(10827598- 20000000)	Motor, Ele, 24vdc, 2200rpm, .6hp, 22mm	1
▲		1059370	(10000000- 20000000)	Brush, Motor, Replmt [Bag Of 4)	1
▲	2	1014328	(10000000- 20000000)	Key, Sq, 05mm X 05mm, 25mml	1
∇	1	1212669	(10000000- 10827597)	Motor, Ele, 24vdc, 2200rpm, .6hp, 22mm (Replaced By 9015162)	1
▲		1059370	(10000000- 20000000)	Brush, Motor, Replmt [Bag Of 4)	1
▲	2	1014328	(10000000- 20000000)	Key, Sq, 05mm X 05mm, 25mml	1
	3	1020341	(10000000- 20000000)	Screw, Hex, M8 X 1.25 X 20, Ss, Sems	6
	4	1209745	(10000000- 20000000)	Plate, Mtg, Head [50cm Orb]	1
	5	1212543	(10000000- 20000000)	Isolator, Neoprene, 1.25” X 1.25”, M8	10
	6	08713	(10000000- 20000000)	Nut, Hex, Lock, M8 X 1.25, Nl, Ss	6
	7	01685	(10000000- 20000000)	Washer, Flat, 0.38b 0.88d .08, Ss	8
	8	1212527	(10000000- 20000000)	Deck Wldt, Scrbr [Volga Wet]	1
	9	1034731	(10000000- 20000000)	Screw, Hex, M6 X 1.00 X 16, Sems, Ss	4
	10	08713	(10000000- 20000000)	Nut, Hex, Lock, M8 X 1.25, Nl, Ss	6
	11	9014175	(10000000- 20000000)	Kit, Eccentric Assy, [T300] (See Breakdowns)	1
	12	1014918	(10000000- 20000000)	Wheel, 03.0d 0.88w 0.31b, W/ Bshg, Rbr	2
	13	1210221	(10000000- 20000000)	Washer, Wave, .515b, .875d, .013, Ss	2
	14	222505	(10000000- 20000000)	Screw, Hex, M8 X 1.25 X 45, Ss	2
	15	1212468	(10000000- 20000000)	Manifold, Distribution, Water, Orb [Vw]	1
	16	1212807	(10000000- 20000000)	Fitting, Plstc, Str, Qm08/Bm08	1
	17	607776	(10000000- 20000000)	Clamp, Hose, Wir, .73 - .77, Silver	1
∇	18	9014189	(10000000- 20000000)	Kit, Afmkt, Pad Driver [T300]	1
▲	19	1212615	(10000000- 20000000)	Face, Pad Driver [Volga Wet]	1
	20	09739	(10000000- 20000000)	Nut, Hex, Lock, M5 X 0.80, Nl, Ss	5
	21	01683	(10000000- 20000000)	Washer, Flat, 10, Ss	5
	22	140916	(10000000- 20000000)	Clamp, Cable, Nyl, 0.62d, Nat	5
	23	1218926	(10000000- 20000000)	Screw, Flt, Soc, M8 X 1.25 X 14, Ss	4
	24	1074344	(10000000- 20000000)	Harness, Ele [Ring With .250m Tail]	1

∇ ASSEMBLY

▲ INCLUDED IN ASSEMBLY

RECOVERY TANK GROUP, BASE MODEL

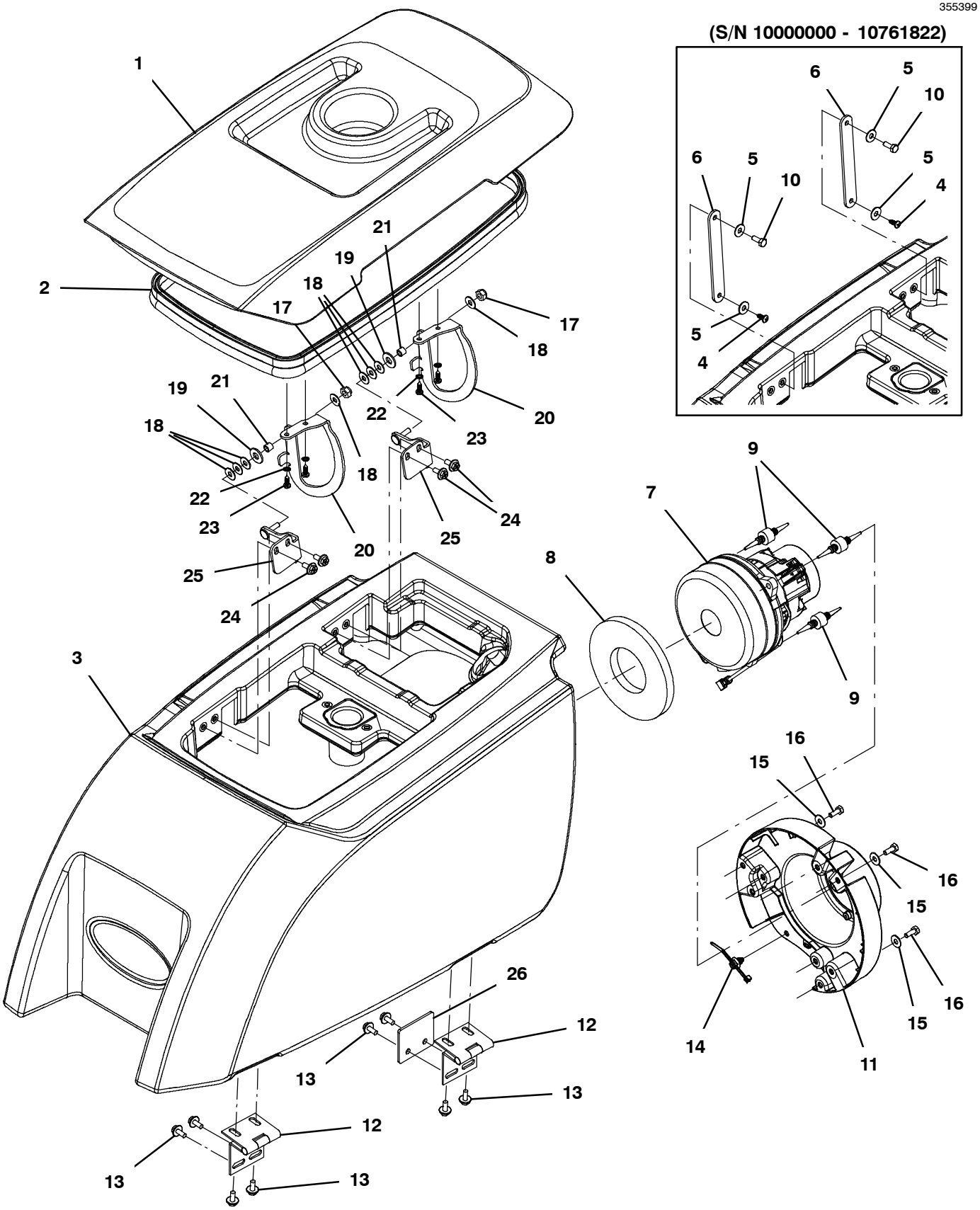

RECOVERY TANK GROUP, BASE MODEL

	Ref.	Part No.	Serial Number	Description	Qty.
∇	1	9014682	(10000000- 20000000)	Kit, Cover, Recvy, Ci [Na]	1
∇	1	9014683	(10000000- 20000000)	Kit, Cover, Recvy, Ci [Jp]	1
▲	2	1210472	(10000000- 20000000)	Seal, Afmkt, Bulb, 0.50d .13grip, 05ft	1
	3	9014151	(10000000- 20000000)	Kit, Tank, Recvy, W/Labels [T300e]	1
	4	1018155	(10000000- 10761822)	Screw, Pan, Phl, M5 X 0.80 X 16, Tcut,Ss	2
	5	01684	(10000000- 10761822)	Washer, Flat, 0.27b 0.69d .05, Ss	4
	6	1212553	(10000000- 10761822)	Strap, Retaining, Cover, 125.0l	2
∇	7	1219312	(10000000- 20000000)	Fan, Vacuum, 5.7d, 024vdc, 2 Stage	1
▲		372883	(10000000- 20000000)	Vr, Brush Kit, Motor, Ele (1 Pkg = 2 Pcs)	1
	8	100038	(10000000- 20000000)	Gasket, .50, 02.63id 05.75od, Adh [Epdm]	1
	9	1062016	(10000000- 20000000)	Isolator, Vib, .75d	3
	10	11329	(10000000- 10761822)	Screw, Hex, M6 X 1.00 X 16, Nl, Ss	2
	11	1207368	(10000000- 20000000)	Mount, Vacfan, 5.7/6.6	1
	12	1209466	(10000000- 20000000)	Hinge, 6mm Pin 2.5 73.5mmw 60.0mml, Bent	2
	13	1034731	(10000000- 20000000)	Screw, Hex, M6 X 1.00 X 16, Sems, Ss	8
	14	1210807	(10000000- 20000000)	Wire, Tie [W/.25” Fir Tree Clip]	1
	15	01684	(10000000- 20000000)	Washer, Flat, 0.27b 0.69d .05, Ss	3
	16	11329	(10000000- 20000000)	Screw, Hex, M6 X 1.00 X 16, Nl, Ss	3
∇		9014279	(10761823- 20000000)	Hinge, Kit, Lid, Ci, [T300]	1
▲	17	08712	(10761823- 20000000)	Nut, Hex, Lock, M6 X 1.00, Nl, Ss	2
▲	18	01684	(10761823- 20000000)	Washer, Flat, 0.27b 0.69d .05, Ss	8
▲	19	1231213	(10761823- 20000000)	Washer, Flat, 0.39b 1.00d .02, Ss	2
▲	20	1219440	(10761823- 20000000)	Hinge, Goose Neck	2
▲	21	80491	(10761823- 20000000)	Sleeve, P/M, 0.25b 0.38d 0.2l [430ss]	2
▲	22	07514	(10761823- 20000000)	Washer, Lock, Int, 10, Ss	4
▲	23	1018155	(10761823- 20000000)	Screw, Pan, Phl, M5 X 0.80 X 16, Tcut,Ss	4
▲	24	1034731	(10761823- 20000000)	Screw, Hex, M6 X 1.00 X 16, Sems, Ss	4
▲	25	1219473	(10761823- 20000000)	Hinge, Mount, Wldt	2
	26	1220553	(10000000- 20000000)	Plate, Hinge, Doubler	1

∇ ASSEMBLY
▲ INCLUDED IN ASSEMBLY

∇ ASSEMBLY
▲ INCLUDED IN ASSEMBLY

RECOVERY TANK FILTER AND HOSE GROUP, PINCH CUFF SCREW CAP

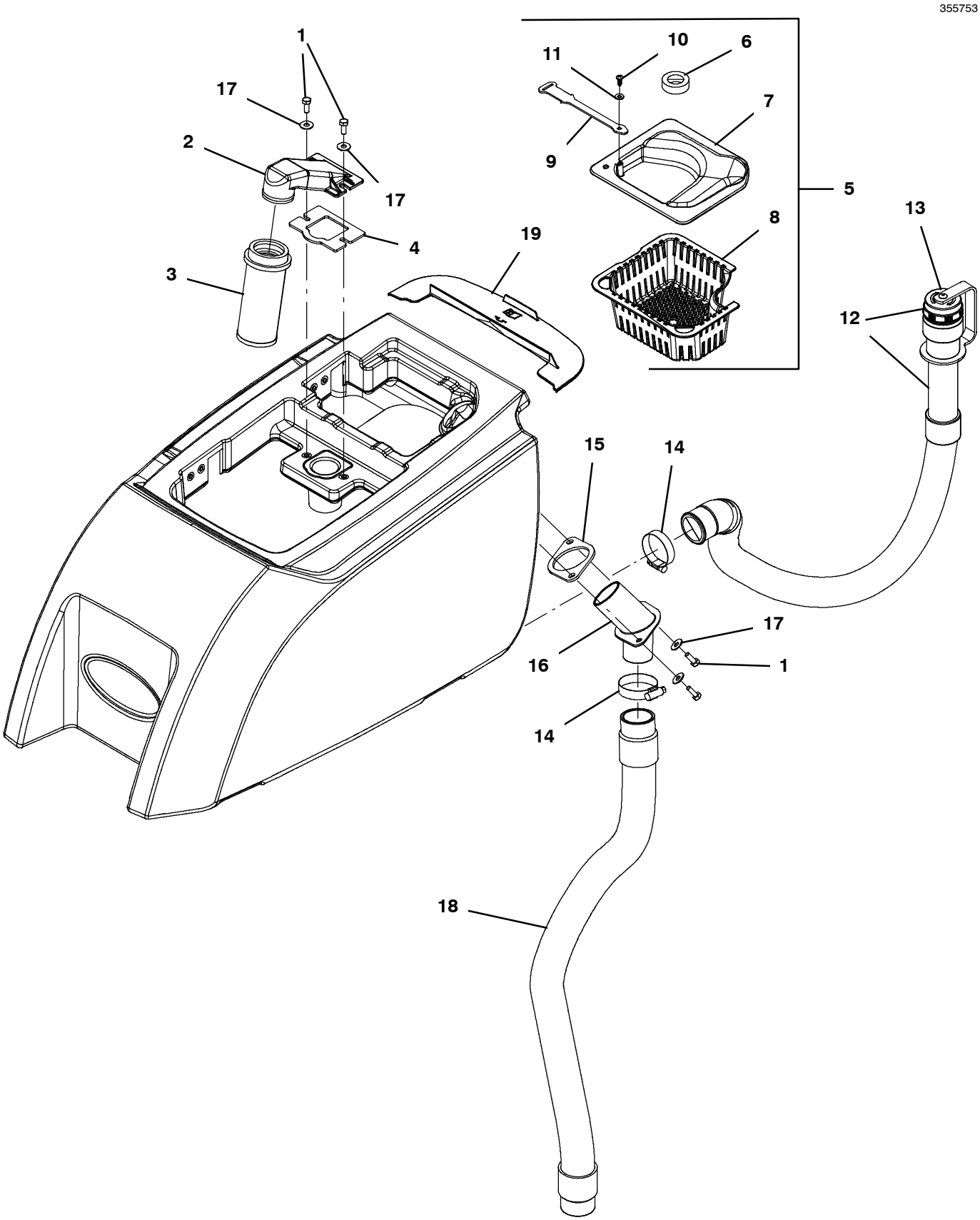

RECOVERY TANK FILTER AND HOSE GROUP, PINCH CUFF SCREW CAP

	Ref.	Part No.	Serial Number	Description	Qty.
	1	11329	(10000000- 20000000)	Screw, Hex, M6 X 1.00 X 16, Nl, Ss	4
	2	1011777	(10000000- 20000000)	Mount, Float, Mold	1
	3	630052	(10000000- 20000000)	Float, Shut- Off, (2)Ball, 1.75d	1
	4	1013628	(10000000- 20000000)	Gasket, Mtg, Float, .125th, Neo, Adh	1
∇	5	9014872	(10785189- 20000000)	Kit, Deflector, Tray, Debris, Cl, [T300]	1
▲	6	1225187	(10785189- 20000000)	Seal, Rbr, Clsd, 12.7Th, 24.0Id, 40.0Od	1
▲	7	1224899	(10785189- 20000000)	Deflector, Tray, Debris	1
▲	8	1207357	(10000000- 20000000)	Tray, Debris, Tank, Recvy [T300]	1
▲	9	1225172	(10785189- 20000000)	Strap, Retaining, Deflector, 150.0L	1
▲	10	1018155	(10785189- 20000000)	Screw, Pan, Phl, M5 X 0.80 X 16, Tcut,Ss	1
▲	11	01683	(10785189- 20000000)	Washer, Flat, 10, Ss	1
∇	12	1246719	(10949064- 20000000)	Hose Assy, Drain, 1.5id X 21.9l [Pu] (Gray - Option)	1
▲∇	13	1219134	(10000000- 20000000)	Cap, Drain Assy [Gray]	1
▲▲		1008637	(10000000- 20000000)	Seal, Org, 1.48id 1.76od	1
	14	11531	(10000000- 20000000)	Clamp, Hose, Wormdrive, 1.06- 2.00d, .56w	2
	15	1037106	(10000000- 20000000)	Gasket, Adapter, Hose .13, Neo	1
	16	1207196	(10000000- 20000000)	Tube, Hose, Adapter, 1.5d [T300]	1
	17	01684	(10000000- 20000000)	Washer, Flat, 0.27b 0.69d .05, Ss	4
	18	1204663	(10000000- 20000000)	Hose Assy, W/2cuff,1.5d 031l 1.5/1.5[Pu] (Gray - Option)	1
	19	9014905	(10786729- 20000000)	Cover Kit, Circuitbreaker, Ci[T300/E/Ss]	1

∇ ASSEMBLY

▲ INCLUDED IN ASSEMBLY

RECOVERY TANK FILTER AND HOSE GROUP, STANDARD SCREW CAP

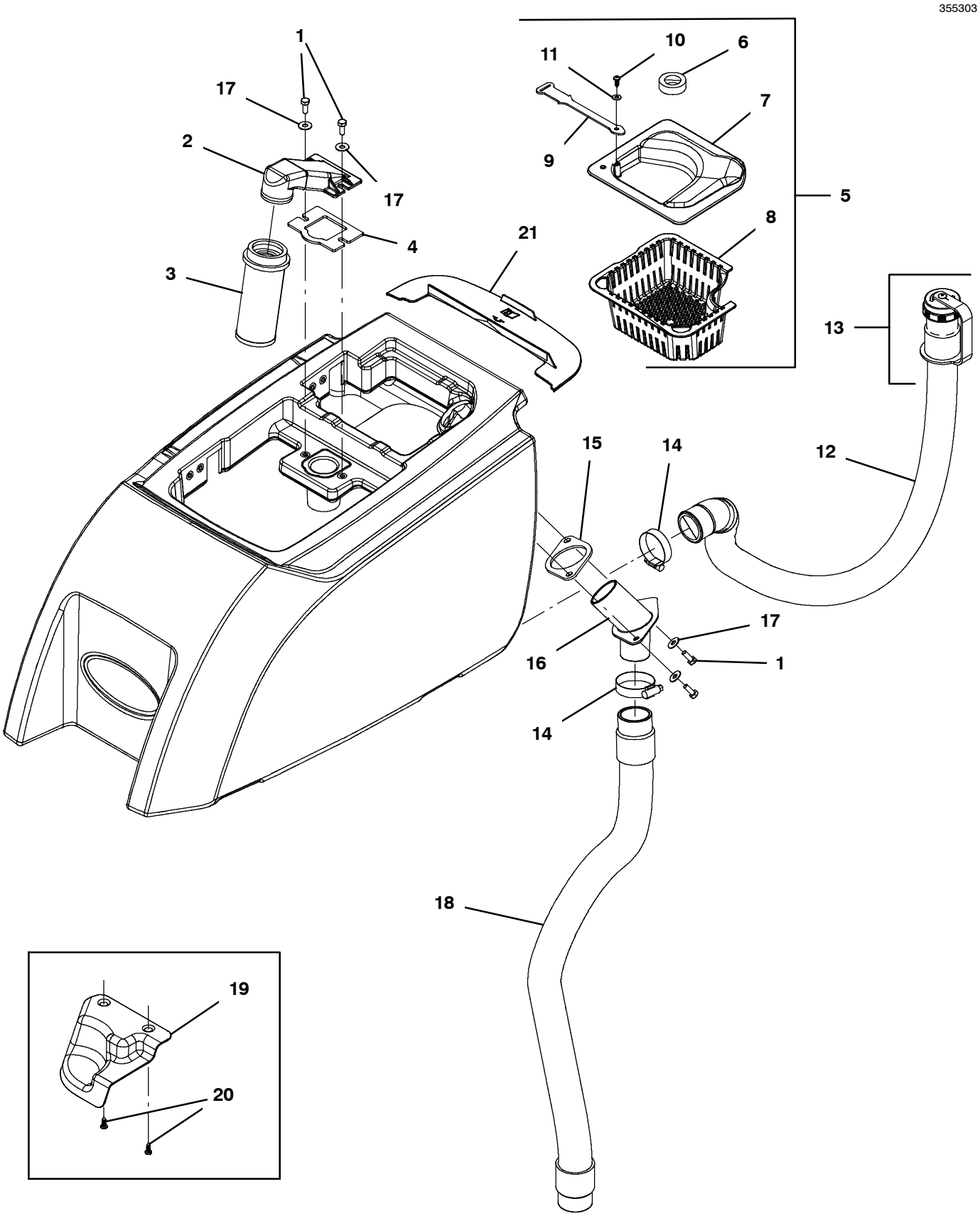

RECOVERY TANK FILTER AND HOSE GROUP, STANDARD SCREW CAP

	Ref.	Part No.	Serial Number	Description	Qty.
	1	11329	(10000000- 20000000)	Screw, Hex, M6 X 1.00 X 16, Nl, Ss	4
	2	1011777	(10000000- 20000000)	Mount, Float, Mold	1
	3	630052	(10000000- 20000000)	Float, Shut- Off, (2)Ball, 1.75d	1
	4	1013628	(10000000- 20000000)	Gasket, Mtg, Float, .125th, Neo, Adh	1
∇	5	9014872	(10785189- 20000000)	Kit, Deflector, Tray, Debris, Cl, [T300]	1
▲	6	1225187	(10785189- 20000000)	Seal, Rbr, Clsd, 12.7Th, 24.0Id, 40.0Od	1
▲	7	1224899	(10785189- 20000000)	Deflector, Tray, Debris	1
▲	8	1207357	(10000000- 20000000)	Tray, Debris, Tank, Recvy [T300]	1
▲	9	1225172	(10785189- 20000000)	Strap, Retaining, Deflector, 150.0L	1
▲	10	1018155	(10785189- 20000000)	Screw, Pan, Phl, M5 X 0.80 X 16, Tcut,Ss	1
▲	11	01683	(10785189- 20000000)	Washer, Flat, 10, Ss	1
∇	12	1213010	(10000000- 20000000)	Hose Assy, Drain, 1.5d 017l 1.5/Cap[Pvc] (Black - Standard)	1
▲	13	1218955	(10000000- 20000000)	Cap, Drain Assy [Black]	1
∇	12	1213008	(10000000- 10949063)	Hose Assy, Drain, 1.5d 025l 1.5/Cap [Pu] (Gray - Option) (No Longer Available - Replaced by Gray Pinch Cuff Screw Cap 1246719)	1
▲	13	1219134	(10000000- 20000000)	Cap, Drain Assy [Gray]	1
	14	11531	(10000000- 20000000)	Clamp, Hose, Wormdrive, 1.06- 2.00d, .56w	2
	15	1037106	(10000000- 20000000)	Gasket, Adapter, Hose .13, Neo	1
	16	1207196	(10000000- 20000000)	Tube, Hose, Adapter, 1.5d [T300]	1
	17	01684	(10000000- 20000000)	Washer, Flat, 0.27b 0.69d .05, Ss	4
	18	1211220	(10000000- 20000000)	Hose Assy,W/2cuff,1.5d 022l 1.5/1.5[Pvc] (Black - Standard)	1
	18	1204663	(10000000- 20000000)	Hose Assy, W/2cuff,1.5d 031l 1.5/1.5[Pu] (Gray - Option)	1
	19	1210214	(10000000- 10785188)	Deflector, Water, Recvy (Replaced By 9014872)	1
	20	1018155	(10000000- 10785188)	Screw, Pan, Phl, M5 X 0.80 X 16, Tcut,Ss	2
	21	9014905	(10786729- 20000000)	Cover Kit, Circuitbreaker, Ci[T300/E/Ss]	1

∇ ASSEMBLY

▲ INCLUDED IN ASSEMBLY

RECOVERY TANK FILTER AND HOSE GROUP, CONTROL VALVE

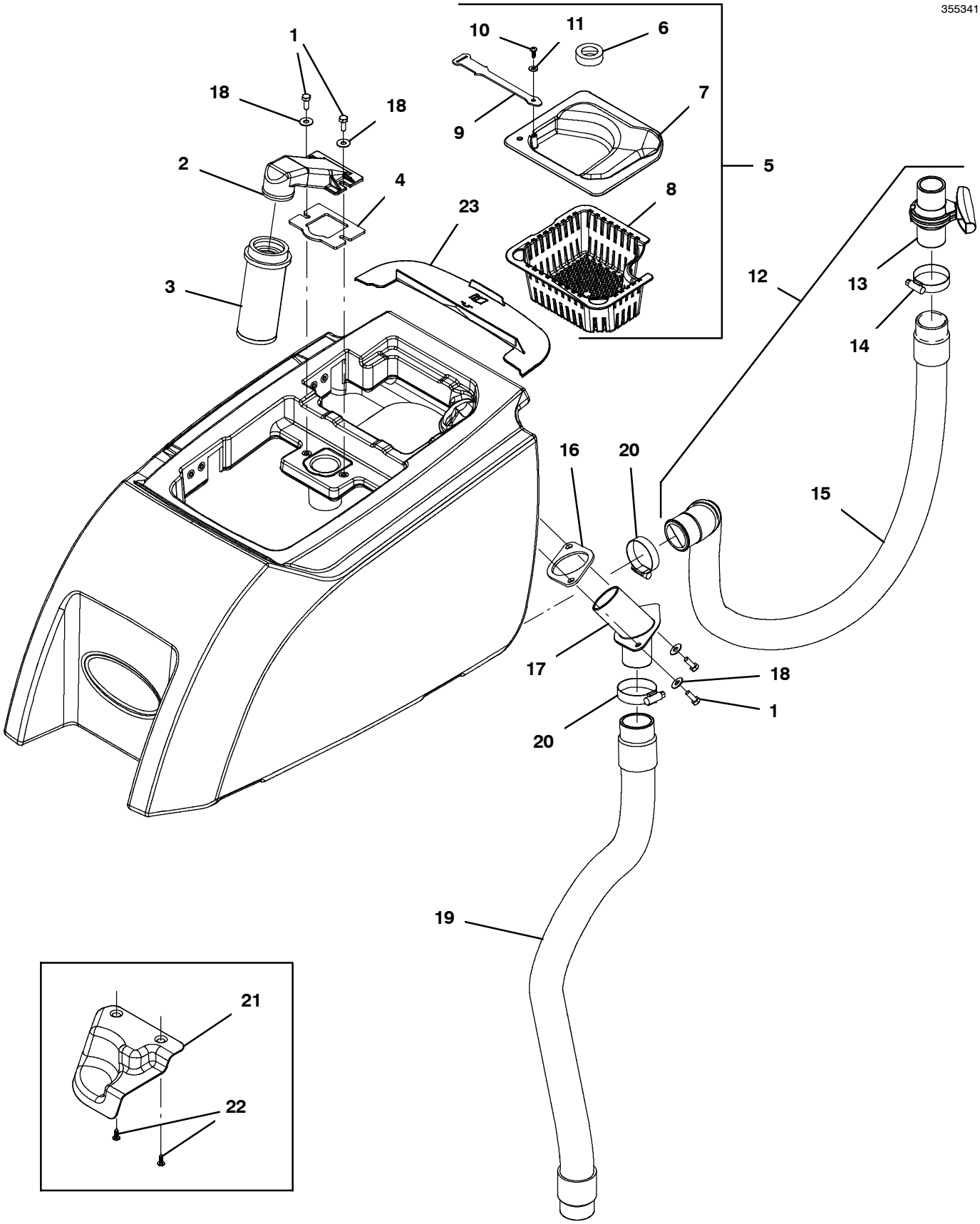

RECOVERY TANK FILTER AND HOSE GROUP, CONTROL VALVE

	Ref.	Part No.	Serial Number	Description	Qty.
	1	11329	(10000000- 20000000)	Screw, Hex, M6 X 1.00 X 16, Nl, Ss	4
	2	1011777	(10000000- 20000000)	Mount, Float, Mold	1
	3	630052	(10000000- 20000000)	Float, Shut- Off, (2)Ball, 1.75d	1
	4	1013628	(10000000- 20000000)	Gasket, Mtg, Float, .125th, Neo, Adh	1
∇	5	9014872	(10785189- 20000000)	Kit, Deflector, Tray, Debris, Cl, [T300]	1
▲	6	1225187	(10785189- 20000000)	Seal, Rbr, Clsd, 12.7Th, 24.0Id, 40.0Od	1
▲	7	1224899	(10785189- 20000000)	Deflector, Tray, Debris	1
▲	8	1207357	(10000000- 20000000)	Tray, Debris, Tank, Recvy [T300]	1
▲	9	1225172	(10785189- 20000000)	Strap, Retaining, Deflector, 150.0L	1
▲	10	1018155	(10785189- 20000000)	Screw, Pan, Phl, M5 X 0.80 X 16, Tcut,Ss	1
▲	11	01683	(10785189- 20000000)	Washer, Flat, 10, Ss	1
∇	12	9014171	(10000000- 10949063)	Hose Assy, With Valve (Gray - Option) (No Longer Available - Replaced by Gray Pinch Cuff Screw Cap 1246719)	1
▲	13	1051986	(10000000- 10949063)	Valve, Ball, 2way, 1.0id Pvc, W/Handle (No Longer Available - Replaced by Gray Pinch Cuff Screw Cap 1246719)	1
▲	14	11531	(10000000- 20000000)	Clamp, Hose, Wormdrive, 1.06- 2.00d, .56w	1
▲	15	1222591	(10000000- 10949063)	Hose Assy, 45cuff,1.5d 021l 1.5/1.5[Pu]	1
	16	1037106	(10000000- 20000000)	Gasket, Adapter, Hose .13, Neo	1
	17	1207196	(10000000- 20000000)	Tube, Hose, Adapter, 1.5d [T300]	1
	18	01684	(10000000- 20000000)	Washer, Flat, 0.27b 0.69d .05, Ss	4
	19	1204663	(10000000- 20000000)	Hose Assy, W/2cuff,1.5d 031l 1.5/1.5[Pu]	1
	20	11531	(10000000- 20000000)	Clamp, Hose, Wormdrive, 1.06- 2.00d, .56w	2
	21	1210214	(10000000- 10785188)	Deflector, Water, Recvy	1
	22	1018155	(10000000- 10785188)	Screw, Pan, Phl, M5 X 0.80 X 16, Tcut,Ss	2
	23	9014905	(10786729- 20000000)	Cover Kit, Circuitbreaker, Ci[T300/E/Ss]	1

∇ ASSEMBLY

▲ INCLUDED IN ASSEMBLY

SOLUTION TANK GROUP

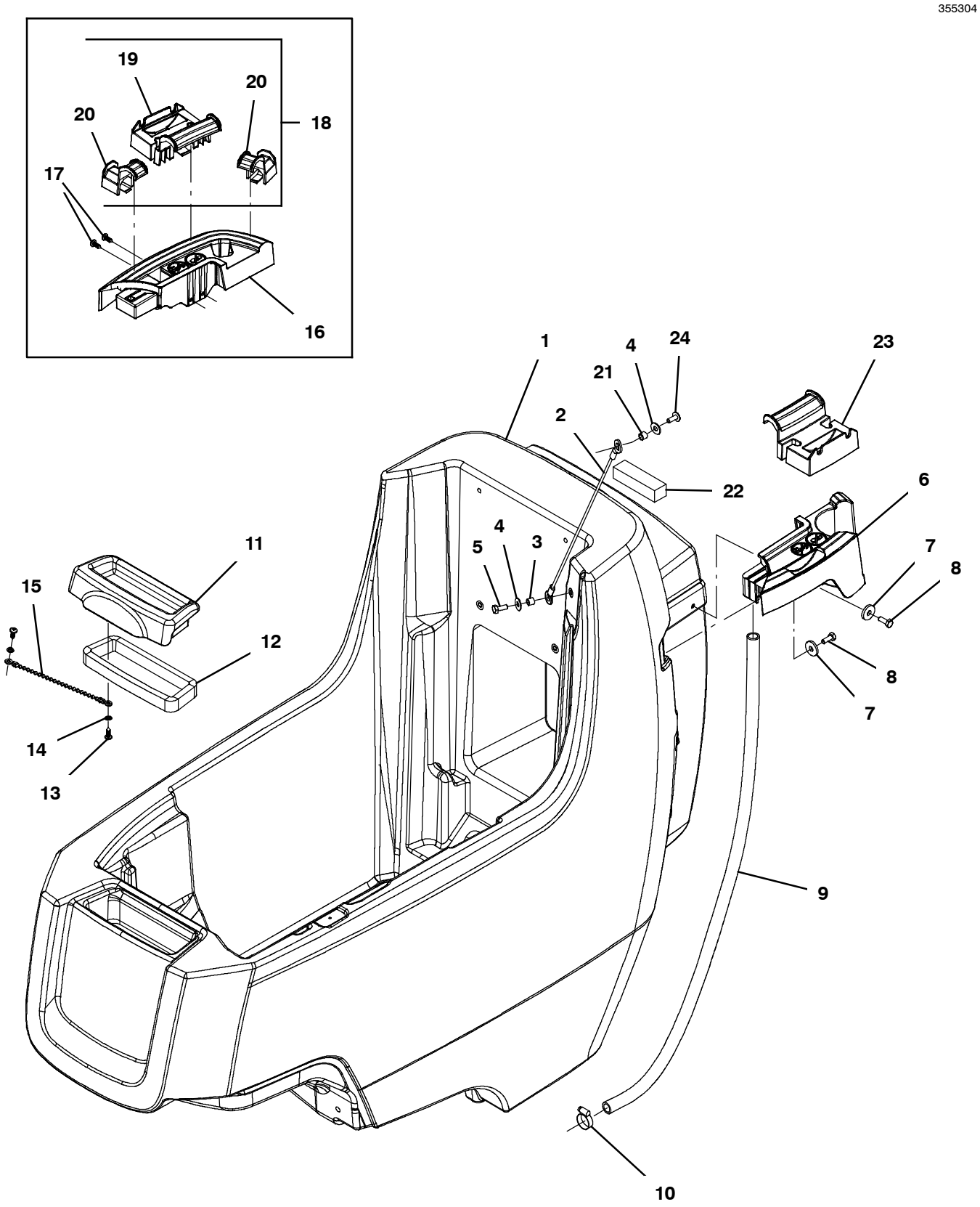

SOLUTION TANK GROUP

	Ref.	Part No.	Serial Number	Description	Qty.
	1	9014156	(10000000- 20000000)	Kit, Tank, Soltn, [T300/T300e]	1
	2	391368	(10000000- 20000000)	Cable, Glv .09d 016.5l .38eye /.38eye	1
	3	140154	(10000000- 20000000)	Sleeve, P/M, 0.25b 0.38d 0.3l, Pl	1
	4	01684	(10000000- 20000000)	Washer, Flat, 0.27b 0.69d .05, Ss	2
	5	12277	(10000000- 20000000)	Screw, Hex, M6 X 1.00 X 20, Nl, Ss	1
	6	1214264	(10000000- 20000000)	Tray, Accssry, Lh, 16mm Screw	1
	7	140053	(10000000- 20000000)	Washer, Flat, 0.28b 0.88d .12, Ss	2
	8	11329	(10000000- 20000000)	Screw, Hex, M6 X 1.00 X 16, Nl, Ss	2
	9	20778	(10000000- 20000000)	Hose, Pvc, Clr, 0.50id 0.69od 030.0l	1
	10	54333	(10000000- 20000000)	Clamp, Hose, Wormdrive, 0.31- 0.88d, .31w	1
	11	9014158	(10000000- 20000000)	Kit, Cvr, Fill, W/ Ech20, Ci [Na/Jp]	1
	11	9014410	(10000000- 20000000)	Kit, Cvr, Fill, Ci [Na/Jp]	1
	12	1046428	(10000000- 20000000)	Seal, Afmkt, Rbr, Clsd, Adh, 02ft	1
	13	1018155	(10000000- 20000000)	Screw, Pan, Phl, M5 X 0.80 X 16, Tcut,Ss	2
	14	07514	(10000000- 20000000)	Washer, Lock, Int, 10, Ss	2
	15	621443	(10000000- 20000000)	Chain, Ball, 10, 0157mml, Ss	1
	16	1214249	(10000000- 10809548)	Tray, Accssry, Rh, 16mm Screw	1
	17	1018155	(10000000- 10809548)	Screw, Pan, Phl, M5 X 0.80 X 16, Tcut,Ss	2
∇	18	9013845	(10000000- 20000000)	Clip Kit, Rail, [T300/T300e/Ss300] (Option - No Longer Available)	1
▲	19	1214292	(10000000- 20000000)	Bracket, Hanger, Rail, Lrg (Option)	1
▲	20	1214291	(10000000- 20000000)	Bracket, Hanger, Rail, Small (Option - No Longer Available)	2
	21	80491	(10000000- 20000000)	Sleeve, P/M, 0.25b 0.38d 0.2l [430ss]	1
	22	1229734	(10000000- 20000000)	Seal, Neo, 0.88, 1.00w 3.6l Adh	1
	23	1214292	(10000000- 20000000)	Bracket, Hanger, Rail, Lrg (Option)	1
	24	1202143	(10000000- 20000000)	Screw, Trs, M6 X 1.00 X 16, Phl, Nl, Blk	1

∇ ASSEMBLY

▲ INCLUDED IN ASSEMBLY

FRAME GROUP, PROPEL MODEL

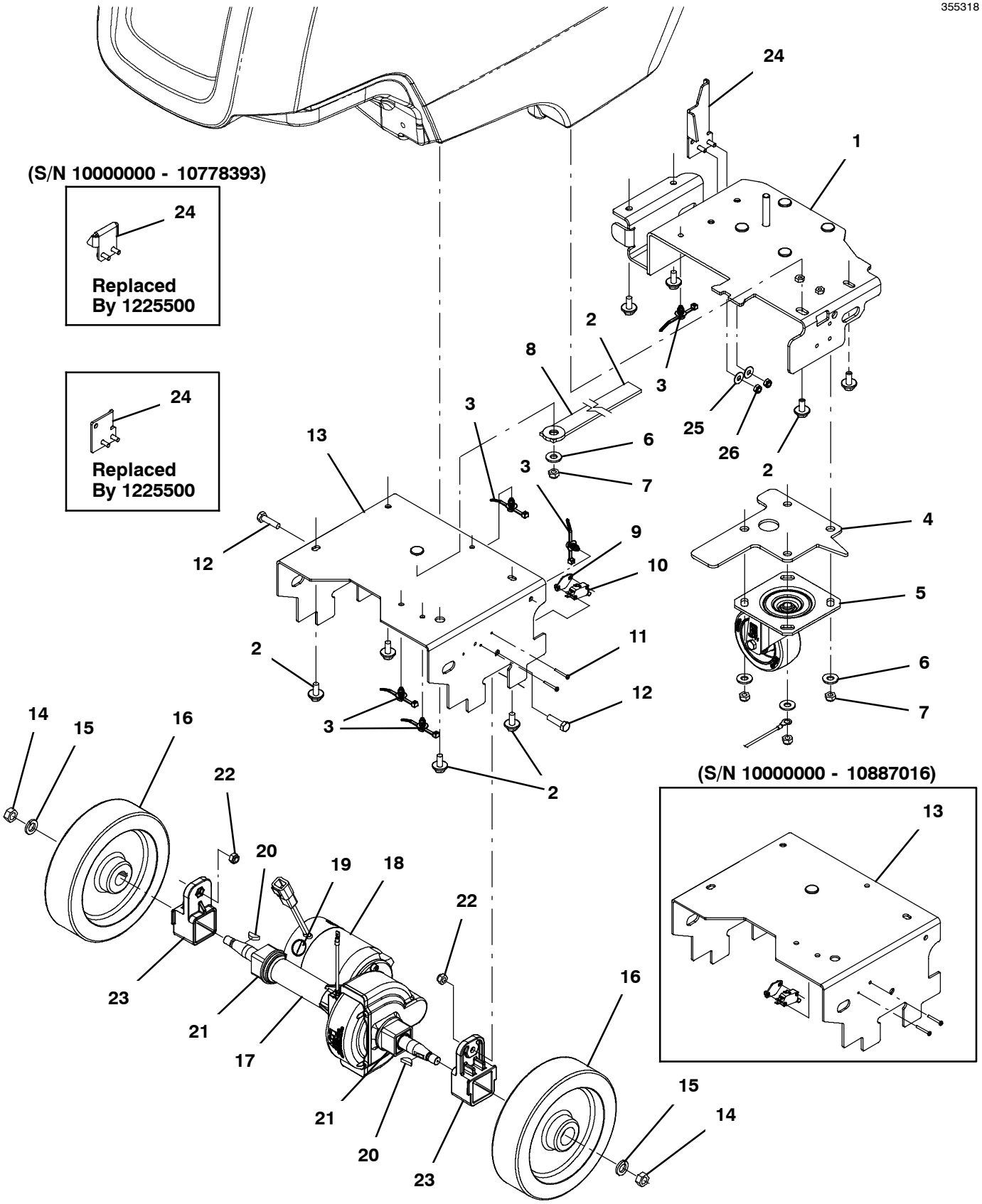

FRAME GROUP, PROPEL MODEL

	Ref.	Part No.	Serial Number	Description	Qty.
	1	1208498	(10000000- 20000000)	Frame Wldt, Rear	1
	2	1020341	(10000000- 20000000)	Screw, Hex, M8 X 1.25 X 20, Ss, Sems	8
	3	1210807	(10000000- 20000000)	Wire, Tie [W/.25” Fir Tree Clip]	5
	4	1215093	(10000000- 20000000)	Spacer, Caster	1
	5	1212422	(10000000- 20000000)	Caster, Swivel [Wicke 224051]	1
	6	01685	(10000000- 20000000)	Washer, Flat, 0.38b 0.88d .08, Ss	5
	7	08713	(10000000- 20000000)	Nut, Hex, Lock, M8 X 1.25, Nl, Ss	5
	8	71579	(10000000- 20000000)	Strap, Static, W/Grommet, .19 1.1w 25.0l	1
	9	1013705	(10000000- 20000000)	Plate, Thread, Switch, M3 Nut, 96hr Pl	1
	10	1215716	(10000000- 20000000)	Switch, 0.1a, Spdt[Micro, Gold Contacts]	1
	11	33933	(10000000- 20000000)	Screw, Pan, Phl, M3 X 0.50 X 25, Ss	2
	12	09011	(10000000- 20000000)	Screw, Hex, M8 X 1.25 X 30, Ss	2
	13	1234032	(10887017- 20000000)	Frame Wldt, Front	1
	13	1211968	(10000000- 10887016)	Frame Wldt, Front	1
	14	09741	(10000000- 20000000)	Nut, Hex, Lock, M12 X 1.75, Nl, Ss	2
	15	140058	(10000000- 20000000)	Washer, Flat, 0.54b 0.88d .06, Ss [Wand]	2
	16	1223582	(10000000- 20000000)	Wheel, Scrbr, 8.00d, W/ Taper	2
∇	17	1209779	(10000000- 20000000)	Transaxle, Ele, 24vdc, 112rpm [Asi]	1
▲		1017782	(10000000- 20000000)	Coupling Kit, Transaxle, Replmt [11057]	1
▲∇	18	1216386	(10000000- 20000000)	Motor, Transaxle, 24vdc, Replmt [Ul, Ce]	1
▲▲	19	1212351	(10000000- 20000000)	Brush Kit, Carbon, Transaxle, Ul (1 Kit = 4 Pcs)	1
▲	20	1021167	(10000000- 20000000)	Key, Woodruff, 5mm	2
▲	21	612880	(10000000- 20000000)	Joint, Transaxle, Replmt	2
	22	08713	(10000000- 20000000)	Nut, Hex, Lock, M8 X 1.25, Nl, Ss	2
	23	1028292	(10000000- 20000000)	Adapter, Mtg, Axle, Alm [T3]	2
	24	1225500	(JAN2020- 20000000)	Bracket Wldt, Latch, Lift, Pl [T300]	1
	24	1223078	(10778394- DEC2019)	Bracket Wldt, Latch	1
	24	1013946	(10000000- 10778393)	Bracket, Locking, Pedal, Foot (Replaced By 9014788)	1
	25	01684	(10000000- 20000000)	Washer, Flat, 0.27b 0.69d .05, Ss	2
	26	08712	(10000000- 20000000)	Nut, Hex, Lock, M6 X 1.00, Nl, Ss	2

∇ ASSEMBLY

▲ INCLUDED IN ASSEMBLY

FRAME GROUP, PUSH MODEL

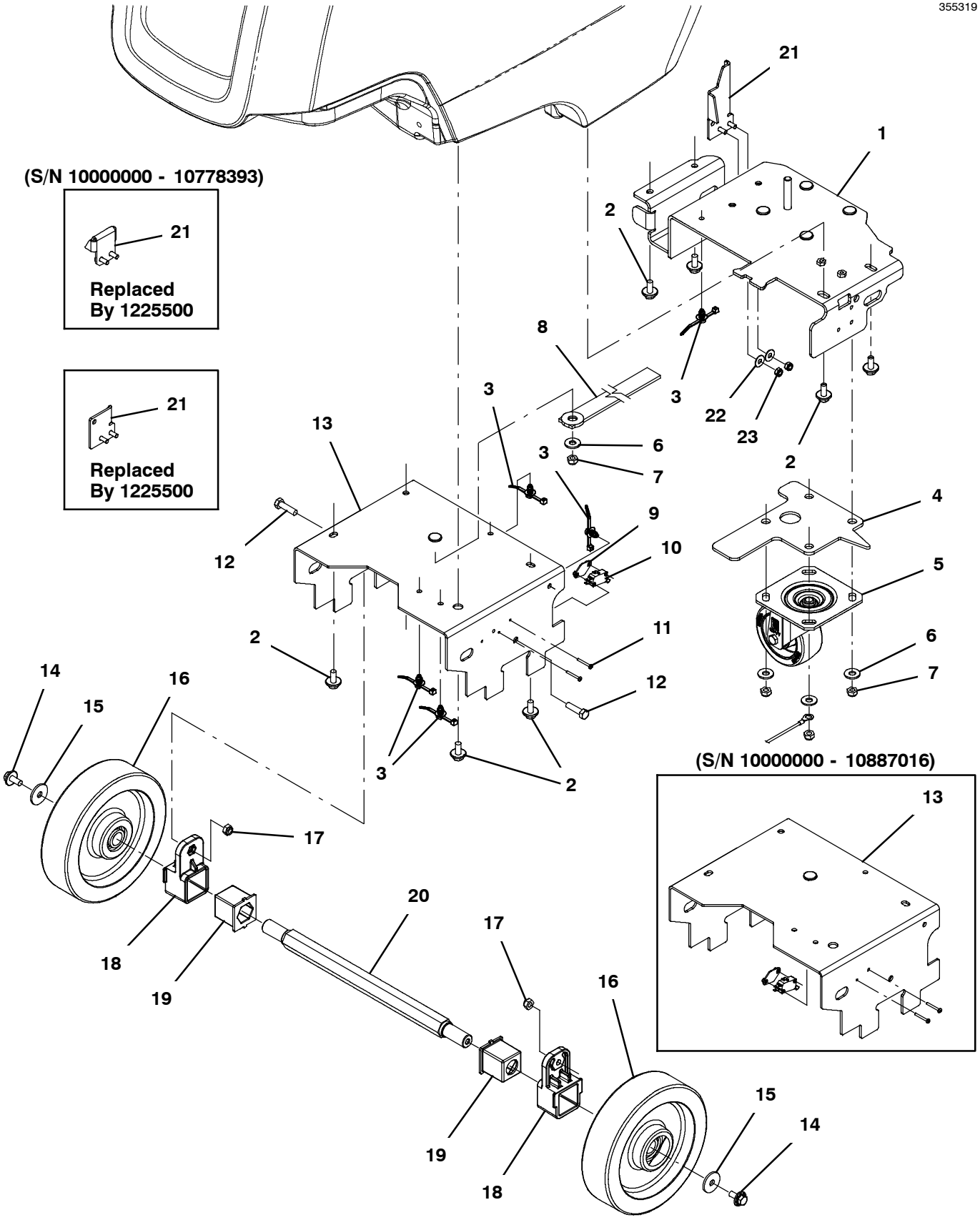

FRAME GROUP, PUSH MODEL

Ref.	Part No.	Serial Number	Description	Qty.
1	1208498	(10000000- 20000000)	Frame Wldt, Rear	1
2	1020341	(10000000- 20000000)	Screw, Hex, M8 X 1.25 X 20, Ss, Sems	8
3	1210807	(10000000- 20000000)	Wire, Tie [W/.25” Fir Tree Clip]	5
4	1215093	(10000000- 20000000)	Spacer, Caster	1
5	1212422	(10000000- 20000000)	Caster, Swivel [Wicke 224051]	1
6	01685	(10000000- 20000000)	Washer, Flat, 0.38b 0.88d .08, Ss	5
7	08713	(10000000- 20000000)	Nut, Hex, Lock, M8 X 1.25, Nl, Ss	5
8	71579	(10000000- 20000000)	Strap, Static, W/Grommet, .19 1.1w 25.0l	1
9	1013705	(10000000- 20000000)	Plate, Thread, Switch, M3 Nut, 96hr Pl	1
10	1215716	(10000000- 20000000)	Switch, 0.1a, Spdt[Micro, Gold Contacts]	1
11	33933	(10000000- 20000000)	Screw, Pan, Phl, M3 X 0.50 X 25, Ss	2
12	09011	(10000000- 20000000)	Screw, Hex, M8 X 1.25 X 30, Ss	2
13	1234032	(10887017- 20000000)	Frame Wldt, Front	1
13	1211968	(10000000- 10887016)	Frame Wldt, Front	1
14	1020341	(10000000- 20000000)	Screw, Hex, M8 X 1.25 X 20, Ss, Sems	2
15	1016331	(10000000- 20000000)	Washer, Flat, 0.34b 1.25d .11, Ss	2
16	1223724	(10000000- 20000000)	Wheel, Scrbr, 8.00d, W/ Brg	2
17	08713	(10000000- 20000000)	Nut, Hex, Lock, M8 X 1.25, Nl, Ss	2
18	1028292	(10000000- 20000000)	Adapter, Mtg, Axle, Alm [T3]	2
19	1028381	(10000000- 20000000)	Grommet, Axle [Tpu, T3 Push]	2
20	1028382	(10000000- 20000000)	Axle, Wheel, Hex, Clr Zn [T3 Push]	1
24	1225500	(JAN2020- 20000000)	Bracket Wldt, Latch, Lift, Pl [T300]	1
24	1223078	(10778394- DEC2019)	Bracket Wldt, Latch	1
21	1013946	(10000000- 10778393)	Bracket, Locking, Pedal, Foot (Replaced By 9014788)	1
22	01684	(10000000- 20000000)	Washer, Flat, 0.27b 0.69d .05, Ss	2
23	08712	(10000000- 20000000)	Nut, Hex, Lock, M6 X 1.00, Nl, Ss	2

MANUAL DOWN PRESSURE GROUP

355283

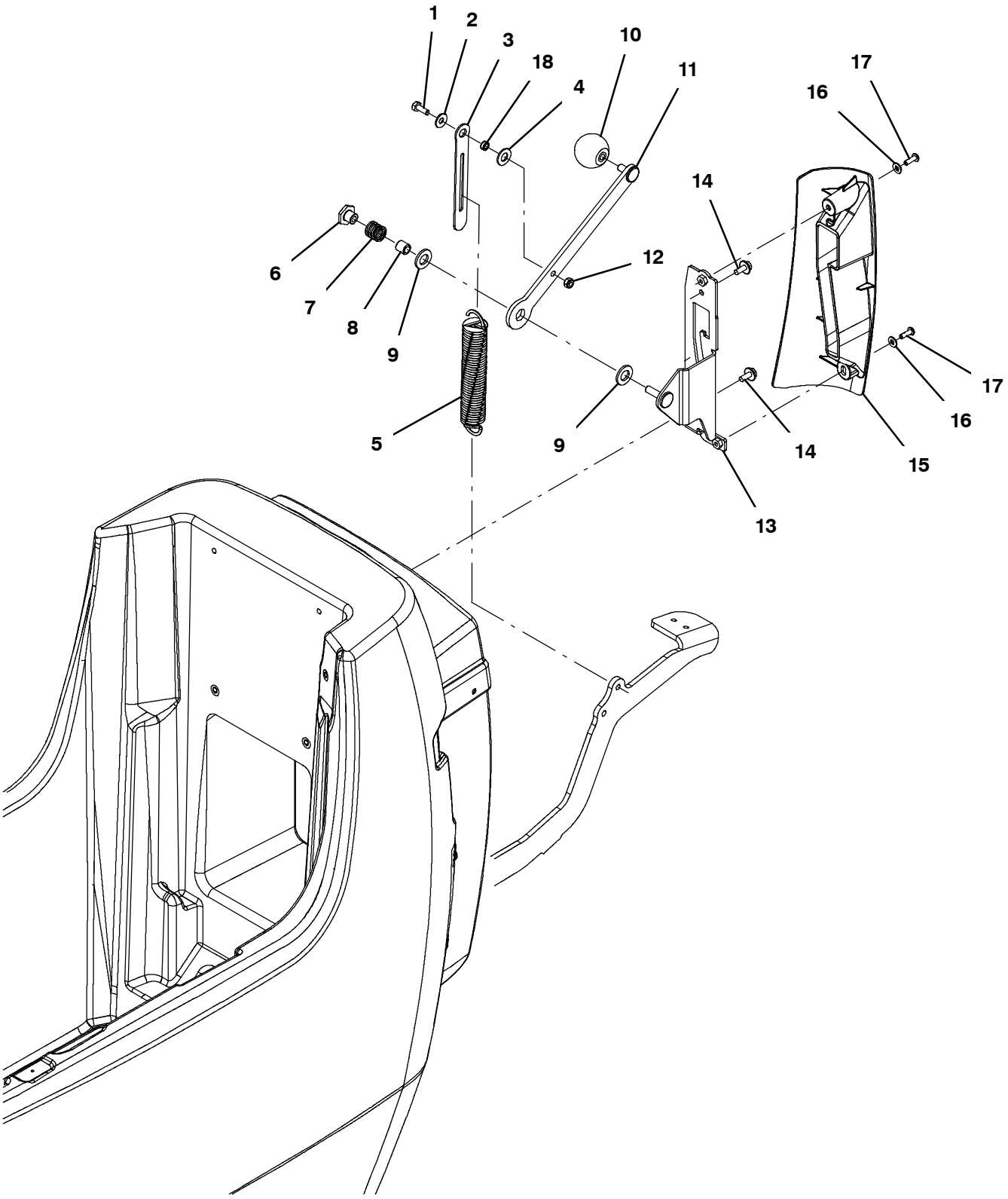

MANUAL DOWN PRESSURE GROUP

Ref.	Part No.	Serial Number	Description	Qty.
1	11329	(10000000- 20000000)	Screw, Hex, M6 X 1.00 X 16, Nl, Ss	1
2	01684	(10000000- 20000000)	Washer, Flat, 0.27b 0.69d .05, Ss	1
3	1213745	(10000000- 20000000)	Plate, Link	1
4	20536	(10000000- 20000000)	Washer, Flat, 0.45b 1.19d .06, Nyl	1
5	1216611	(10000000- 20000000)	Spring, Extn, 1.14od, 0.13wir, 6.5l (Disk & Orbital Models)	1
5	1216677	(10000000- 20000000)	Spring, Extn, 1.08od, 0.09wir, 6.5l (Cylindrical Model)	1
6	1018181	(10000000- 20000000)	Nut, T, M8 X 1.25 X 0.50od X 0.4l	1
7	1018756	(10000000- 20000000)	Spring, Cmpr, 0.70od .08wir 00.7l, Pl,Mw	1
8	222460	(10000000- 20000000)	Sleeve, P/M, 0.32b 0.50d 0.5l [430ss]	1
9	1013936	(10000000- 20000000)	Washer, Flat, 0.51b 0.94d .10, Nyl	2
10	1017156	(10000000- 20000000)	Knob, Ball, M8 Insert, 40mmd, Plstc	1
11	1210591	(10000000- 20000000)	Lever Wldt, Down Pressure, Mnl	1
12	08712	(10000000- 20000000)	Nut, Hex, Lock, M6 X 1.00, Nl, Ss	1
13	1210597	(10000000- 20000000)	Bracket Wldt, Down Press, Mnl	1
14	1034731	(10000000- 20000000)	Screw, Hex, M6 X 1.00 X 16, Sems, Ss	2
15	1209371	(10000000- 20000000)	Cover, Lever Assy, Down- Press	1
16	01683	(10000000- 20000000)	Washer, Flat, 10, Ss	2
17	1205799	(10000000- 20000000)	Screw, Btn, M5 X 0.8 X 16, 8.8, Nl, Torx	2
18	80491	(10000000- 20000000)	Sleeve, P/M, 0.25b 0.38d 0.2l [430ss]	1

SINGLE DOWN PRESSURE GROUP

355284

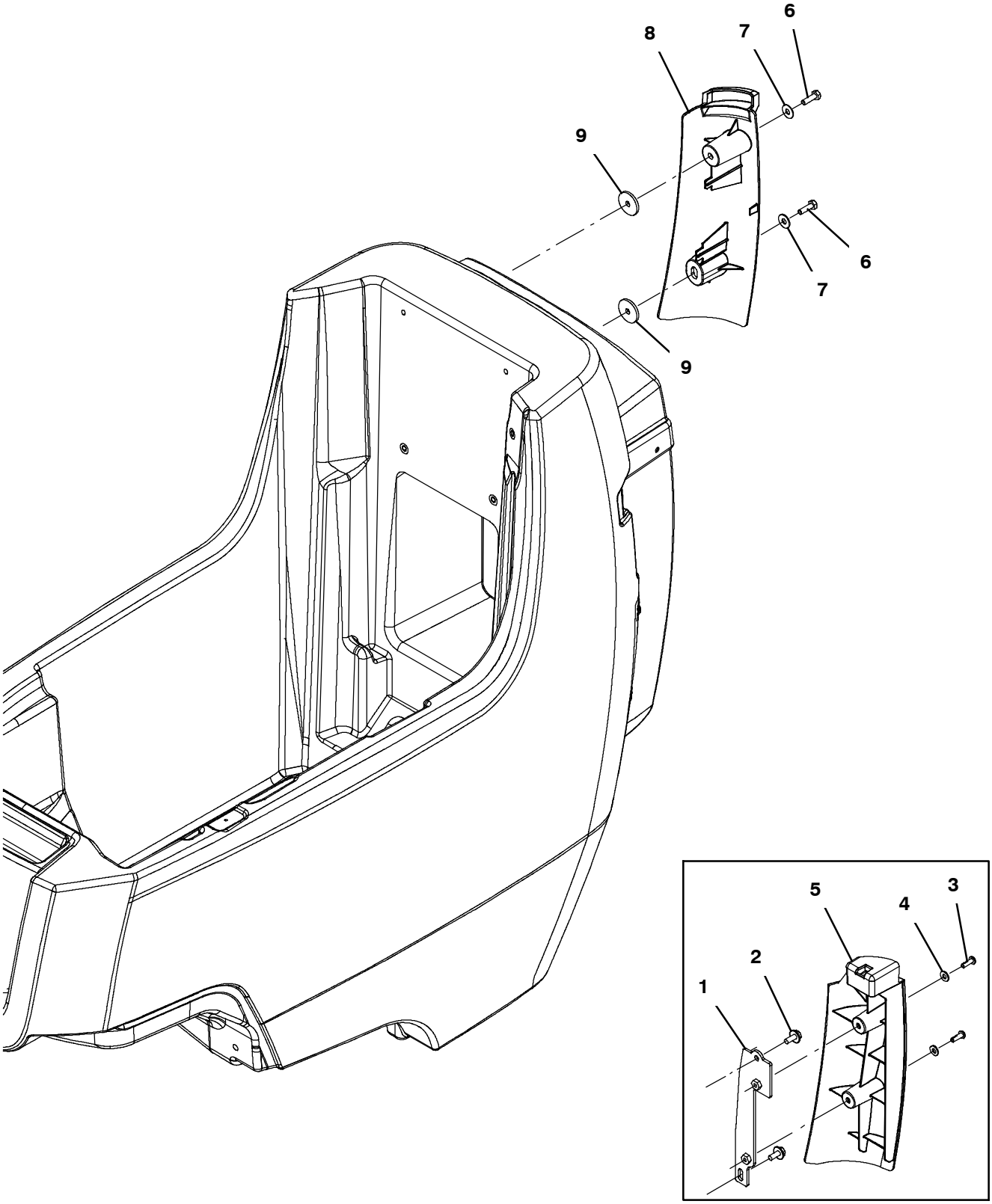

SINGLE DOWN PRESSURE GROUP

Ref.	Part No.	Serial Number	Description	Qty.
1	1214330	(10000000- 10809548)	Bracket Wldt, Mtg, Cover	1
2	1034731	(10000000- 10809548)	Screw, Hex, M6 X 1.00 X 16, Sems, Ss	2
3	1205799	(10000000- 10809548)	Screw, Btn, M5 X 0.8 X 16, 8.8, Nl, Torx	2
4	01683	(10000000- 10809548)	Washer, Flat, 10, Ss	2
5	1212336	(10000000- 10809548)	Cover, Pulley Assy, Down- Press	1
6	12277	(10809549- 20000000)	Screw, Hex, M6 X 1.00 X 20, Nl, Ss	2
7	01684	(10809549- 20000000)	Washer, Flat, 0.27b 0.69d .05, Ss	2
8	1224289	(10809549- 20000000)	Cover, Tank, Rh, [T300/E/Ss]	1
9	1225843	(10809549- 20000000)	Washer, Flat, M6 X 3 X 30, Retain, Nyl	2

SOLUTION GROUP, BASE MODEL (NEW BARB CONNECTOR STYLE)

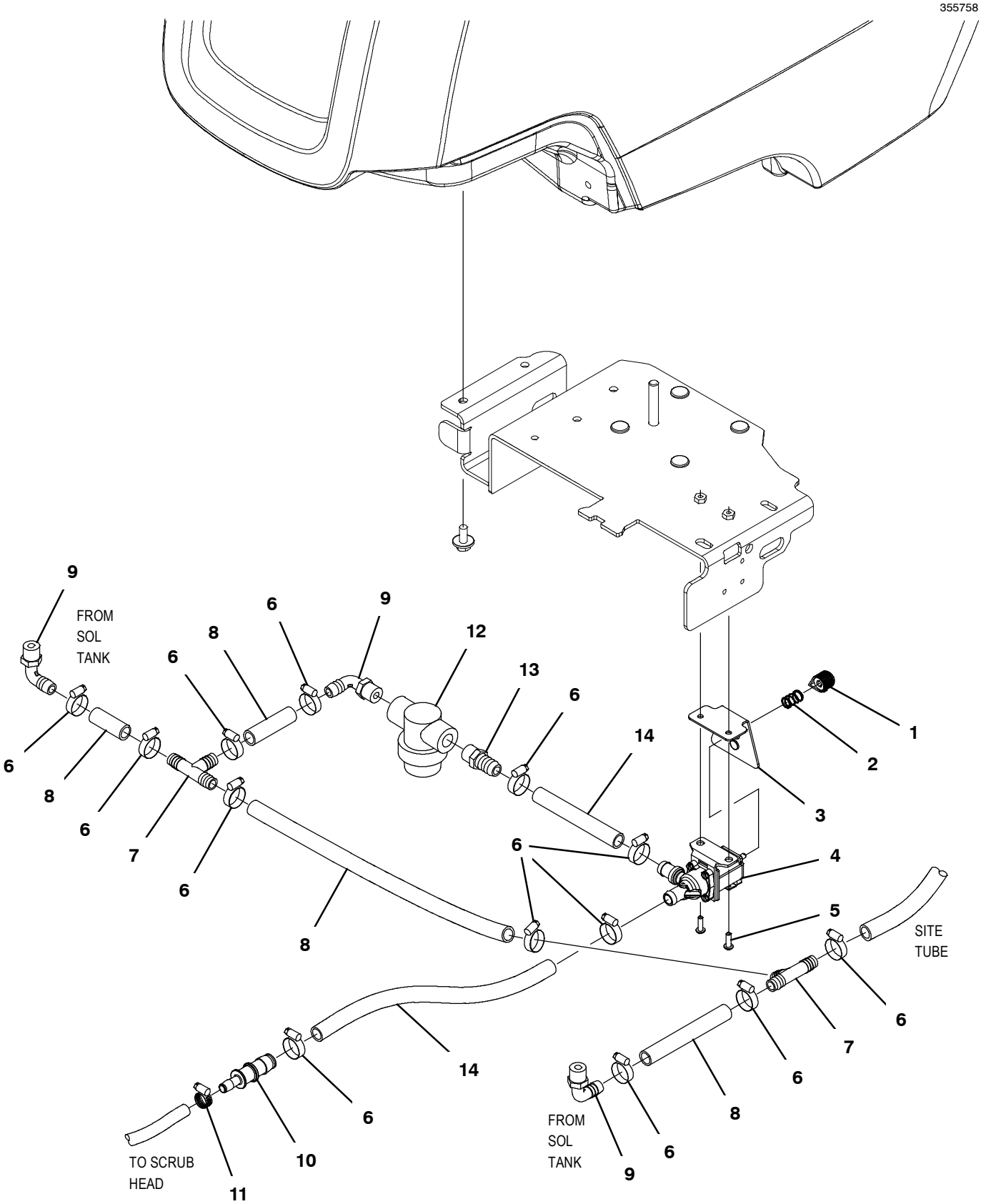

SOLUTION GROUP, BASE MODEL (NEW BARB CONNECTOR STYLE)

	Ref.	Part No.	Serial Number	Description	Qty.
	1	1013442	(10000000- 20000000)	Knob, Valve, 0.70d 0.61l, 0.21b	1
	2	1017091	(10000000- 20000000)	Spring, Cmpr, 0.50od .04wir 00.8l	1
	3	1210041	(10000000- 20000000)	Bracket Wldt, Mtg, Valve, Soltn	1
	4	1213803	(10978344- 20000000)	Valve, Water, Solenoid, 24vdc, Bm10/Bm10	1
	5	1205799	(10000000- 20000000)	Screw, Btn, M5 X 0.8 X 16, 8.8, Nl, Torx	2
	6	54333	(10978344- 20000000)	Clamp, Hose, Wormdrive, 0.31- 0.88d, .31w	13
	7	63245- 1	(10978344- 20000000)	Fitting, Plstc, Tee, Bm08/Bm08/Bm08	2
	8	1015068	(10978344- 20000000)	Hose, Afmkt, Pvc, Clr, 0.50id, 03ft	1
	9	64778	(10978344- 20000000)	Fitting, Plstc, E90, Bm08/Pm06	3
	10	1243167	(10978344- 20000000)	Fitting, Plstc, Str, Bm06/Bm10	1
	11	43844	(10978344- 20000000)	Clamp, Hose, Wormdrive, 0.25- 0.62d, .31w	1
∇	12	1211537	(10000000- 20000000)	Filter, In- Line, Pf06/Pf06 080m 2.6l Epd	1
▲		1218885	(10000000- 20000000)	Gasket [Epdm, F/1211537]	1
▲		1218883	(10000000- 20000000)	Screen, Fltr, 80 Mesh, Ss [W/ Cage]	1
▲		613991	(10000000- 20000000)	Bowl, Clr, Short, F/1005302	1
	13	1013900	(10978344- 20000000)	Fitting, Plstc, Str, Bm10/Pm06, Nyl	1
	14	1035355	(10978344- 20000000)	Hose, Afmkt, Pvc, Clr, 0.62id, 02ft	1

∇ ASSEMBLY

▲ INCLUDED IN ASSEMBLY

SOLUTION GROUP, BASE MODEL
(ORIGINAL PUSH QUICK CONNECTOR STYLE)

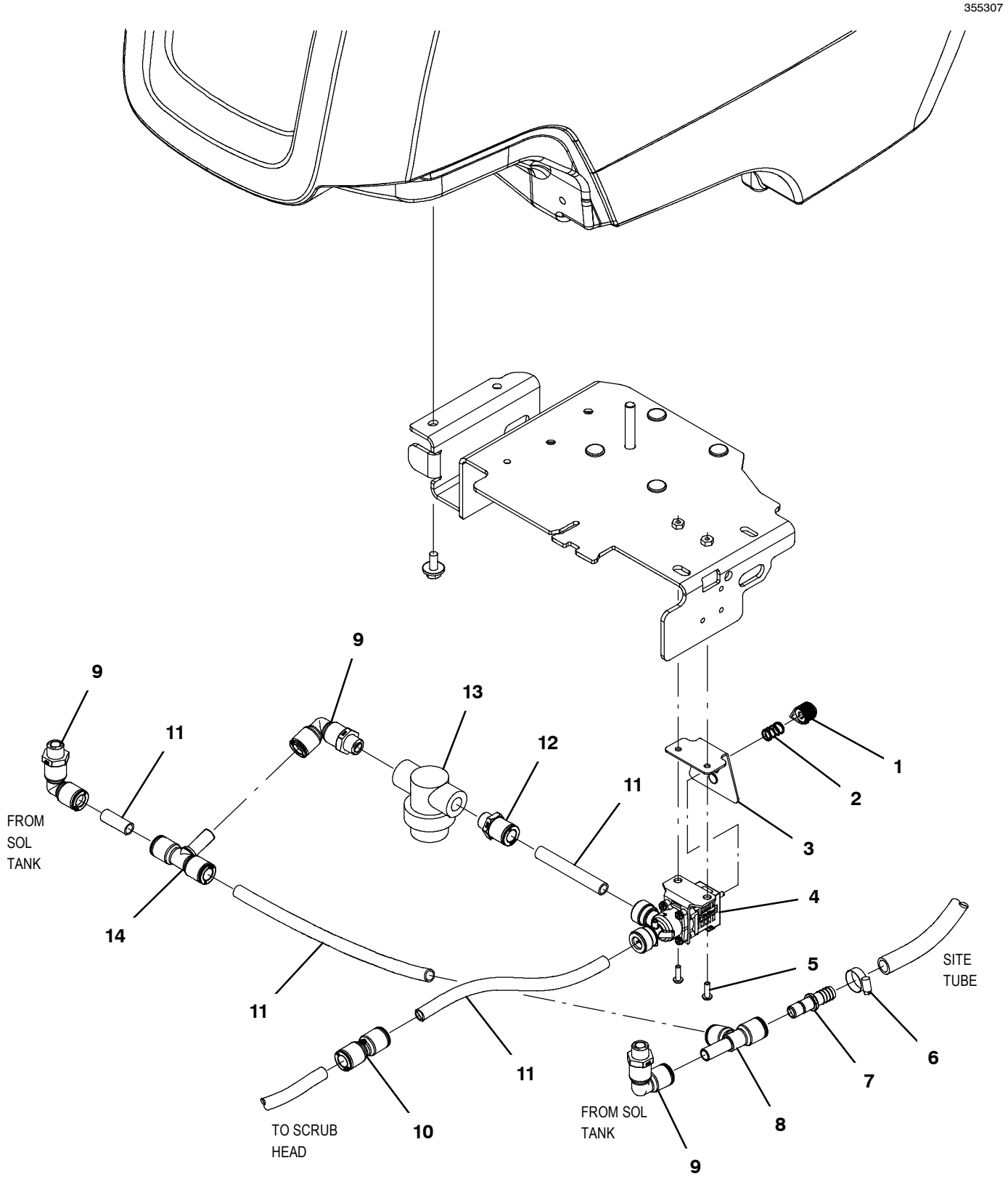

SOLUTION GROUP, BASE MODEL (ORIGINAL PUSH QUICK CONNECTOR STYLE)

	Ref.	Part No.	Serial Number	Description	Qty.
	1	1013442	(10000000- 20000000)	Knob, Valve, 0.70d 0.61l, 0.21b	1
	2	1017091	(10000000- 20000000)	Spring, Cmpr, 0.50od .04wir 00.8l	1
	3	1210041	(10000000- 20000000)	Bracket Wldt, Mtg, Valve, Soltn	1
	4	1211423	(10000000- 10978343)	Valve, Water, Solenoid, 24vdc Qf08/Qf08	1
	5	1205799	(10000000- 20000000)	Screw, Btn, M5 X 0.8 X 16, 8.8, Nl, Torx	2
	6	54333	(10000000- 10978343)	Clamp, Hose, Wormdrive, 0.31- 0.88d, .31w	1
	7	1212807	(10000000- 10978343)	Fitting, Plstc, Str, Qm08/Bm08	1
	8	1212806	(10000000- 10978343)	Fitting, Plstc, Tee, Qf08/Qf08/Qm08	1
	9	1212987	(10000000- 10978343)	Fitting, Plstc, E90, Qf08/Pm06, Swivel	3
	10	1212859	(10000000- 10978343)	Fitting, Plstc, Str, Qf08/Qf08	1
	11	9014145	(10000000- 10978343)	Hose, Afmkt, Pe, .375id .50od, 05ft	1
	12	1212813	(10000000- 10978343)	Fitting, Plstc, Str, Qf08/Pm06	1
∇	13	1211537	(10000000- 20000000)	Filter, In- Line, Pf06/Pf06 080m 2.6l Epd	1
▲		1218885	(10000000- 20000000)	Gasket [Epdm, F/1211537]	1
▲		1218883	(10000000- 20000000)	Screen, Fltr, 80 Mesh, Ss [W/ Cage]	1
▲		613991	(10000000- 20000000)	Bowl, Clr, Short, F/1005302	1
	14	1212810	(10000000- 10978343)	Fitting, Plstc, Tee, Qm08/Qf08/Qf08	1

∇ ASSEMBLY

▲ INCLUDED IN ASSEMBLY

SOLUTION GROUP, BASE MODEL ec-H2O (NEW BARB CONNECTOR STYLE)

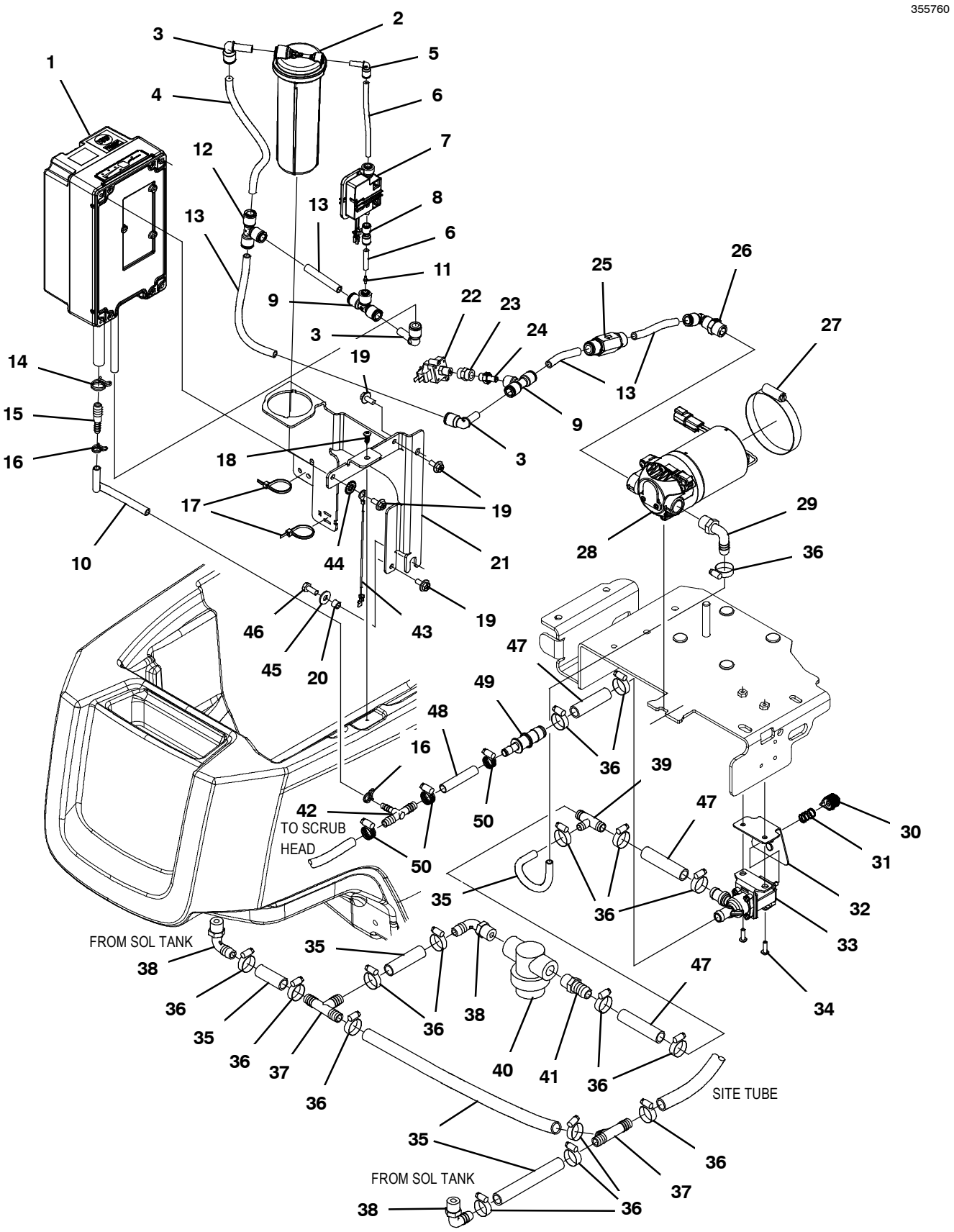

SOLUTION GROUP, BASE MODEL ec-H2O (NEW BARB CONNECTOR STYLE)

	Ref.	Part No.	Serial Number	Description	Qty.
∇	1	9011810	(10000000-20000000)	Module Kit, Replmt [Ec- H2o, B 02] (See Breakdowns)	1
▲	2	9013646	(10000000-20000000)	Cartridge, Ec-H2o Nanoclean Wcm, 270ml	1
	3	1215186	(10000000-20000000)	Fitting, Plstc, E90, Qf06/Qm06	1
	4	9014146	(10000000-20000000)	Hose, Afmkt, Pvc, 0.06id .38od, 05ft	1
	5	1214339	(10000000-20000000)	Fitting, Plstc, E90, Qfo4/Qm04	1
	6	9014147	(10000000-20000000)	Hose, Afmkt, Pvc, 0.06id .25od, 05ft	1
	7	1216973	(10000000-20000000)	Pump Assy, Dispenser	1
	8	1218192	(10000000-20000000)	Fitting, Plstc, Str, Qf04/Qf04	1
	9	1212855	(10000000-20000000)	Fitting, Plstc, Tee, Qf04/Qf06/Qf06	2
	10	1006415	(10000000-20000000)	Hose, Afmkt, Pvc, Clr, 0.25id, 03ft	1
	11	1214972	(10000000-20000000)	Fitting, Orifice, Str, Bm01/Bm01	1
	12	1212573	(10000000-20000000)	Fitting, Plstc, Tee, Qf06/Qf06/Qf06	1
	13	9014148	(10000000-20000000)	Hose, Afmkt, Nat, 0.25id 0.375od, 06ft	1
	14	607775	(10000000-20000000)	Clamp, Hose, Wir, .63 - .66, Blk	1
	15	1039557	(10000000-20000000)	Fitting, Plstc, Str, Bm04/Bm06	1
	16	613735	(10000000-20000000)	Clamp, Hose, Wir, .40 - .42, Yel	2
	17	130773	(10000000-20000000)	Tie, Cable, Nyl, 11.0l, .14w, 3.0 Max. D	2
	18	1018155	(10000000-20000000)	Screw, Pan, Phl, M5 X 0.80 X 16, Tcut,Ss	1
	19	1034731	(10000000-20000000)	Screw, Hex, M6 X 1.00 X 16, Sems, Ss	5
	20	140154	(10000000-20000000)	Sleeve, P/M, 0.25b 0.38d 0.3l, Pl	1
	21	1209249	(10000000-20000000)	Bracket, Mtg, Ec-H20 Module [T300]	1
	22	1044335	(10000000-20000000)	Switch, Press, 6psi, Pm02	1
	23	150307	(10000000-20000000)	Fitting, Brs, Str, Pf02/Pf02, Cplg	1
	24	1216185	(10000000-20000000)	Fitting, Plstc, Str, Qm04/Pm02	1
	25	1215527	(10000000-20000000)	Valve, Check, 1.0 Psi Qf06/Qf06	1
	26	1212812	(10000000-20000000)	Fitting, Plstc, E90, Qf06/Pm06, Swivel	1
	27	43555	(10000000-20000000)	Clamp, Hose, Wormdrive, 2.62-3.50d	1
	28	1210517	(10000000-20000000)	Pump, Soltn, Ele, 24vdc, 35 Psi	1
	29	64778	(10978344-20000000)	Fitting, Plstc, E90, Bm08/Pm06	1
	30	1013442	(10000000-20000000)	Knob, Valve, 0.70d 0.61l, 0.21b	1
	31	1017091	(10000000-20000000)	Spring, Cmpr, 0.50od .04wir 00.8l	1
	32	1210041	(10000000-20000000)	Bracket Wldt, Mtg, Valve, Soltn	1
	33	1213803	(10978344-20000000)	Valve, Water, Solenoid, 24vdc, Bm10/Bm10	1
	34	1205799	(10000000-20000000)	Screw, Btn, M5 X 0.8 X 16, 8.8, Nl, Torx	2
	35	1015068	(10978344-20000000)	Hose, Afmkt, Pvc, Clr, 0.50id, 03ft	1
	36	54333	(10978344-20000000)	Clamp, Hose, Wormdrive, 0.31-0.88d, .31w	16
	37	63245-1	(10978344-20000000)	Fitting, Plstc, Tee, Bm08/Bm08/Bm08	2
	38	64778	(10978344-20000000)	Fitting, Plstc, E90, Bm08/Pm06	3
	39	1015486	(10978344-20000000)	Fitting, Plstc, Tee, Bm08/Bm10/Bm10, Br	1
∇	40	1211537	(10000000-20000000)	Filter, In-Line, Pf06/Pf06 080m 2.6l Epd	1
▲		1218885	(10000000-20000000)	Gasket [Epdm, F/1211537]	1
▲		1218883	(10000000-20000000)	Screen, Fltr, 80 Mesh, Ss [W/ Cage]	1
▲		613991	(10000000-20000000)	Bowl, Clr, Short, F/1005302	1

SOLUTION GROUP, BASE MODEL ec-H2O - CONT'D (NEW BARB CONNECTOR STYLE)

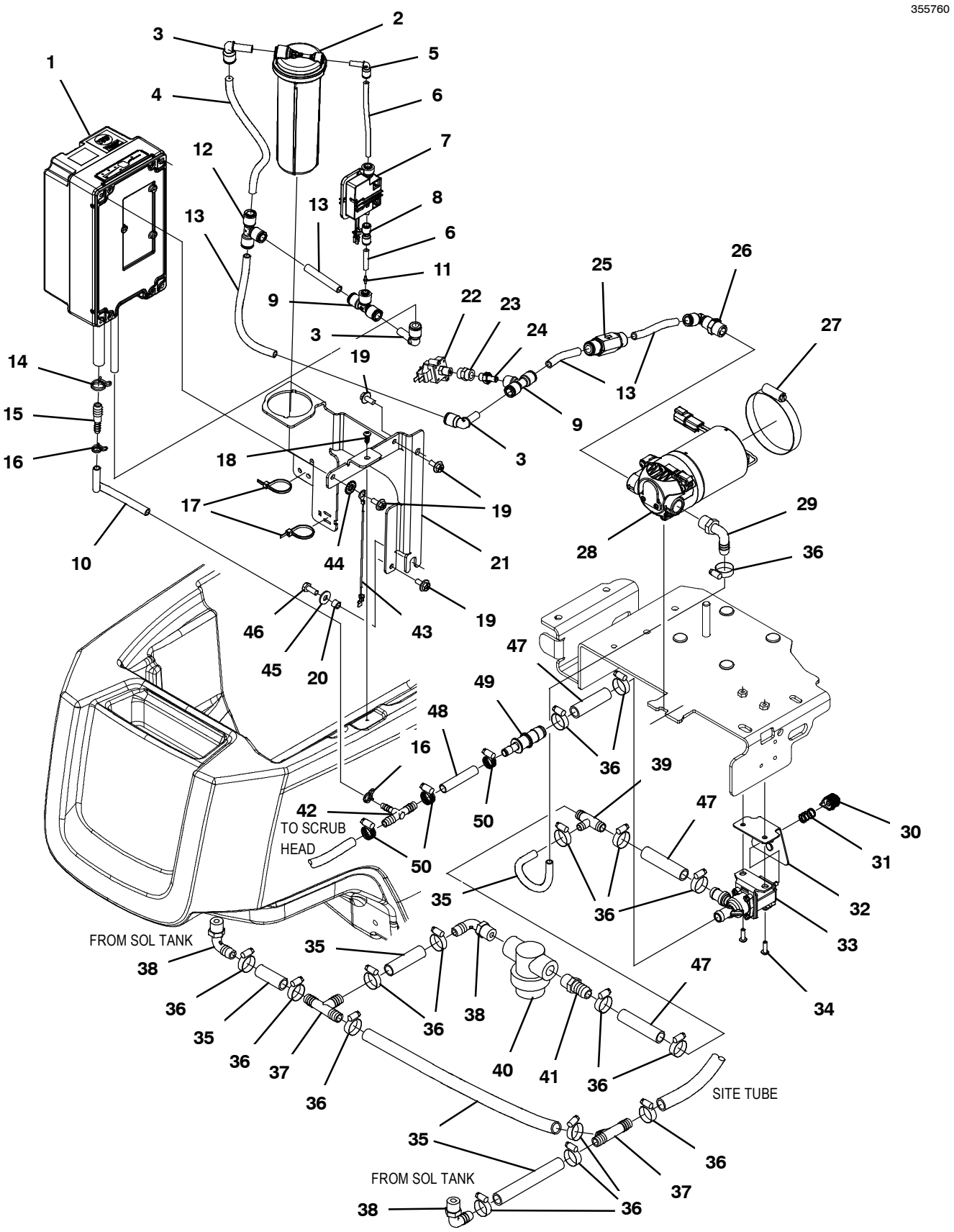

SOLUTION GROUP, BASE MODEL ec-H2O - CONT'D (NEW BARB CONNECTOR STYLE)

Ref.	Part No.	Serial Number	Description	Qty.
41	1013900	(10978344- 20000000)	Fitting, Plstc, Str, Bm10/Pm06, Nyl	1
42	50895	(10978344- 20000000)	Fitting, Plstc, Tee, Bm04/Bm06/Bm06, Br	1
43	1074344	(10000000- 20000000)	Harness, Ele [Ring With .250m Tail]	1
44	41140	(10000000- 20000000)	Washer, Lock, Int- Ext, 0.25	1
45	01684	(10000000- 20000000)	Washer, Flat, 0.27b 0.69d .05, Ss	1
46	12277	(10000000- 20000000)	Screw, Hex, M6 X 1.00 X 20, Nl, Ss	1
47	1035355	(10978344- 20000000)	Hose, Afmkt, Pvc, Clr, 0.62id, 02ft	1
48	1014929	(10978344- 20000000)	Hose, Afmkt, Pvc, Clr, 0.38id, 01ft	1
49	1243167	(10978344- 20000000)	Fitting, Plstc, Str, Bm06/Bm10	1
50	43844	(10978344- 20000000)	Clamp, Hose, Wormdrive, 0.25- 0.62d, .31w	3

∇ ASSEMBLY

▲ INCLUDED IN ASSEMBLY

SOLUTION GROUP, BASE MODEL ec-H2O (ORIGINAL PUSH QUICK CONNECTOR STYLE)

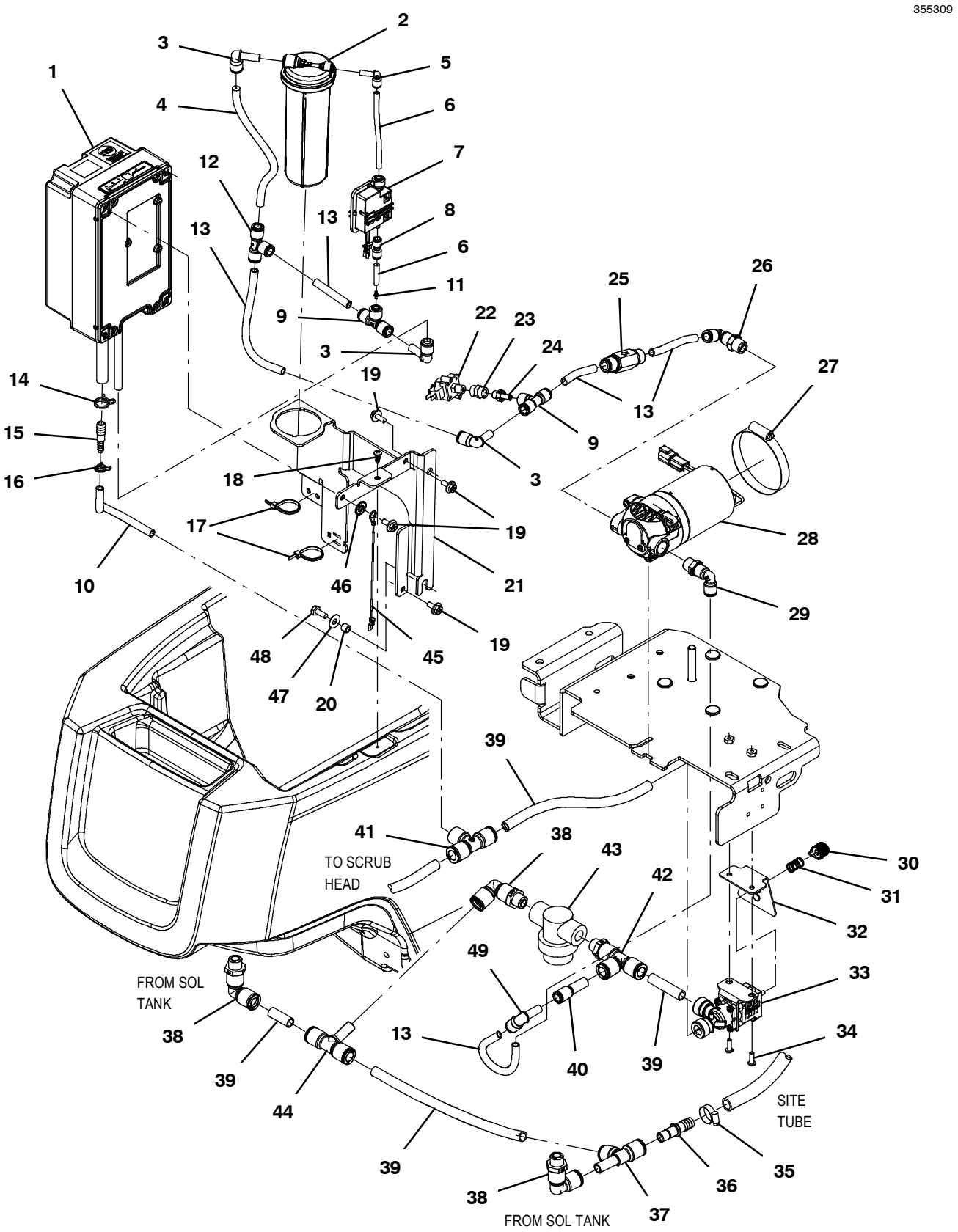

SOLUTION GROUP, BASE MODEL ec-H2O (ORIGINAL PUSH QUICK CONNECTOR STYLE)

	Ref.	Part No.	Serial Number	Description	Qty.
▽	1	9011810	(10000000-20000000)	Module Kit, Replmt [Ec- H2o, B 02] (See Breakdowns)	1
▲	2	9013646	(10000000-20000000)	Cartridge, Ec-H2o Nanoclean Wcm, 270ml	1
	3	1215186	(10000000-20000000)	Fitting, Plstc, E90, Qf06/Qm06	1
	4	9014146	(10000000-20000000)	Hose, Afmkt, Pvc, 0.06id .38od, 05ft	1
	5	1214339	(10000000-20000000)	Fitting, Plstc, E90, Qfo4/Qm04	1
	6	9014147	(10000000-20000000)	Hose, Afmkt, Pvc, 0.06id .25od, 05ft	1
	7	1216973	(10000000-20000000)	Pump Assy, Dispenser	1
	8	1218192	(10000000-20000000)	Fitting, Plstc, Str, Qf04/Qf04	1
	9	1212855	(10000000-20000000)	Fitting, Plstc, Tee, Qf04/Qf06/Qf06	2
	10	1006415	(10000000-20000000)	Hose, Afmkt, Pvc, Clr, 0.25id, 03ft	1
	11	1214972	(10000000-20000000)	Fitting, Orifice, Str, Bm01/Bm01	1
	12	1212573	(10000000-20000000)	Fitting, Plstc, Tee, Qf06/Qf06/Qf06	1
	13	9014148	(10000000-20000000)	Hose, Afmkt, Nat, 0.25id 0.375od, 06ft	1
	14	607775	(10000000-20000000)	Clamp, Hose, Wir, .63 - .66, Blk	1
	15	1039557	(10000000-20000000)	Fitting, Plstc, Str, Bm04/Bm06	1
	16	613735	(10000000-20000000)	Clamp, Hose, Wir, .40 - .42, Yel	1
	17	130773	(10000000-20000000)	Tie, Cable, Nyl, 11.0l, .14w, 3.0 Max. D	2
	18	1018155	(10000000-20000000)	Screw, Pan, Phl, M5 X 0.80 X 16, Tcut,Ss	1
	19	1034731	(10000000-20000000)	Screw, Hex, M6 X 1.00 X 16, Sems, Ss	5
	20	140154	(10000000-20000000)	Sleeve, P/M, 0.25b 0.38d 0.3l, Pl	1
	21	1209249	(10000000-20000000)	Bracket, Mtg, Ec-H20 Module [T300]	1
	22	1044335	(10000000-20000000)	Switch, Press, 6psi, Pm02	1
	23	150307	(10000000-20000000)	Fitting, Brs, Str, Pf02/Pf02, Cplg	1
	24	1216185	(10000000-20000000)	Fitting, Plstc, Str, Qm04/Pm02	1
	25	1215527	(10000000-20000000)	Valve, Check, 1.0 Psi Qf06/Qf06	1
	26	1212812	(10000000-20000000)	Fitting, Plstc, E90, Qf06/Pm06, Swivel	1
	27	43555	(10000000-20000000)	Clamp, Hose, Wormdrive, 2.62-3.50d	1
	28	1210517	(10000000-20000000)	Pump, Soltn, Ele, 24vdc, 35 Psi	1
	29	1212812	(10000000-10978343)	Fitting, Plstc, E90, Qf06/Pm06, Swivel	1
	30	1013442	(10000000-20000000)	Knob, Valve, 0.70d 0.61l, 0.21b	1
	31	1017091	(10000000-20000000)	Spring, Cmpr, 0.50od .04wir 00.8l	1
	32	1210041	(10000000-20000000)	Bracket Wldt, Mtg, Valve, Soltn	1
	33	1211423	(10000000-10978343)	Valve, Water, Solenoid, 24vdc Qf08/Qf08	1
	34	1205799	(10000000-20000000)	Screw, Btn, M5 X 0.8 X 16, 8.8, Nl, Torx	2
	35	54333	(10000000-10978343)	Clamp, Hose, Wormdrive, 0.31-0.88d, .31w	1
	36	1212807	(10000000-10978343)	Fitting, Plstc, Str, Qm08/Bm08	1
	37	1212806	(10000000-10978343)	Fitting, Plstc, Tee, Qf08/Qf08/Qm08	1
	38	1212987	(10000000-10978343)	Fitting, Plstc, E90, Qf08/Pm06, Swivel	3
	39	9014145	(10000000-10978343)	Hose, Afmkt, Pe, .375id .50od, 05ft	1
	40	1215218	(10000000-10978343)	Fitting, Plstc, Str, Qf06/Qm08	1
	41	1212875	(10000000-10978343)	Fitting, Plstc, Tee, Qf06/Qf08/Qf08	1
	42	1212808	(10000000-10978343)	Fitting, Plstc, Tee, Qf08/Qf08/Pm06	1
▽	43	1211537	(10000000-20000000)	Filter, In-Line, Pf06/Pf06 080m 2.6l Epd	1
▲		1218885	(10000000-20000000)	Gasket [Epdm, F/1211537]	1
▲		1218883	(10000000-20000000)	Screen, Fltr, 80 Mesh, Ss [W/ Cage]	1
▲		613991	(10000000-20000000)	Bowl, Clr, Short, F/1005302	1
	44	1212810	(10000000-10978343)	Fitting, Plstc, Tee, Qm08/Qf08/Qf08	1
	45	1074344	(10000000-20000000)	Harness, Ele [Ring With .250m Tail]	1
	46	41140	(10000000-20000000)	Washer, Lock, Int-Ext, 0.25	1
	47	01684	(10000000-20000000)	Washer, Flat, 0.27b 0.69d .05, Ss	1
	48	12277	(10000000-20000000)	Screw, Hex, M6 X 1.00 X 20, Nl, Ss	1
	49	1215186	(10890202-10978343)	Fitting, Plstc, E90, Qf06/Qm06	1

ELECTRICAL COMPONENTS GROUP, BASE MODEL

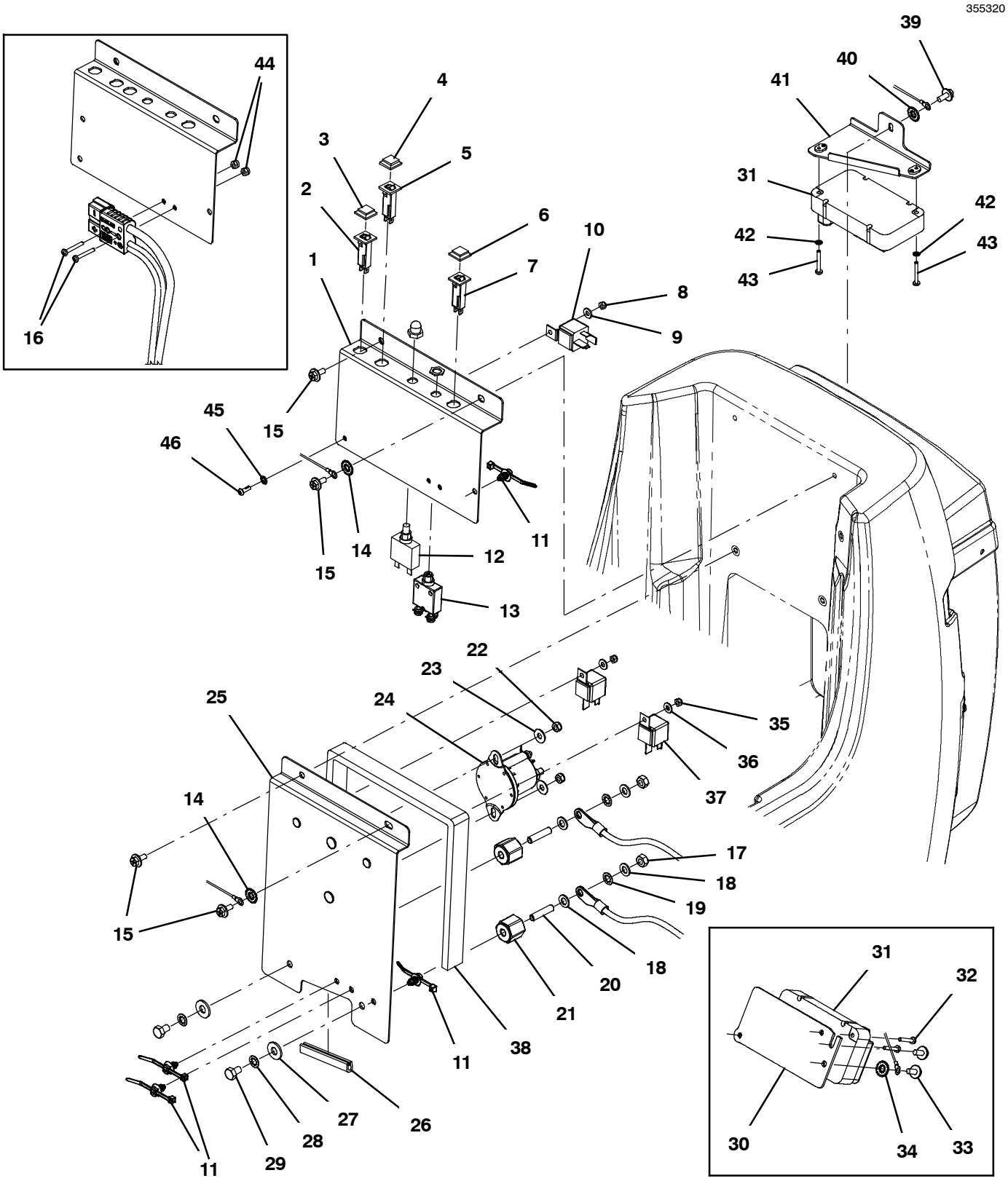

ELECTRICAL COMPONENTS GROUP, BASE MODEL

Ref.	Part No.	Serial Number	Description	Qty.
1	9014188	(10000000- 20000000)	Bracket Wldt, Afmkt, Mtg [Circuitbrkrs]	1
2	1208816	(10000000- 20000000)	Circuitbreaker, 04.0a, Resetable	1
3	1064191	(10000000- 20000000)	Boot, Circuitbreaker	1
4	1064191	(xxxxxxxx- 20000000)	Boot, Circuitbreaker (ec- H2O Option)	1
4	1064191	(10000000- xxxxxxxx)	Boot, Circuitbreaker (ec- H2O Option)	2
5	1064187	(xxxxxxxx- 20000000)	Circuitbreaker, 10.0a, Resetable	1
5	1208816	(10000000- xxxxxxxx)	Circuitbreaker, 04.0a, Resetable (ec- H2O Option)	2
6	1064191	(10000000- 20000000)	Boot, Circuitbreaker	1
7	1064189	(10000000- 20000000)	Circuitbreaker, 20.0a, Resetable	1
8	09739	(10000000- 20000000)	Nut, Hex, Lock, M5 X 0.80, Nl, Ss (ec- H2O Option)	1
9	01683	(10000000- 20000000)	Washer, Flat, 10, Ss (ec- H2O Option)	1
10	1012216	(10000000- 20000000)	Relay, 24vdc, 070a, Spst No, Plug- In (ec- H2O Option)	1
11	1210807	(10000000- 20000000)	Wire, Tie [W/.25” Fir Tree Clip]	4
12	383725	(10000000- 20000000)	Circuitbreaker, 30.0a, Resetable (Propel Model)	1
13	1074526	(10000000- 20000000)	Circuitbreaker, 37.0a	1
14	41140	(10000000- 20000000)	Washer, Lock, Int- Ext, 0.25	2
15	1034731	(10000000- 20000000)	Screw, Hex, M6 X 1.00 X 16, Sems, Ss	4
16	33931	(10000000- xxxxxxxx)	Screw, Pan, Phl, M4 X 0.70 X 30, Ss	2
17	41361	(10000000- 20000000)	Nut, Hex, Std, M8 X 1.25, Brs	2
18	1209373	(10000000- 20000000)	Washer, Flat, M8.4b X 16d X 1.6, Brs	4
19	43952	(10000000- 20000000)	Washer, Lock, Int, 0.31, Ss	2
20	607461	(10000000- 20000000)	Screw, Set, M8 X 1.25 X 35, Nl	2
21	1205345	(10000000- 20000000)	Stand- Off, Wir, M8, Insulator, Panel	2
22	09739	(10000000- 20000000)	Nut, Hex, Lock, M5 X 0.80, Nl, Ss	2
23	01684	(10000000- 20000000)	Washer, Flat, 0.27b 0.69d .05, Ss	2
24	1066409	(10000000- 20000000)	Relay, 24vdc, 150a, No [Trombetta]	1
25	1208619	(10000000- 20000000)	Bracket Wldt, Mtg, Ele	1
26	1020174	(10000000- 20000000)	Molding, Afmkt, Trim, Pvc, .08 .11, 03ft	1
27	01685	(10000000- 20000000)	Washer, Flat, 0.38b 0.88d .08, Ss	2
28	32984	(10000000- 20000000)	Washer, Lock, Int, 0.31	2
29	386868	(10000000- 20000000)	Screw, Hex, M8 X 1.25 X 12, Ss	2
30	1210078	(10000000- 10813435)	Bracket Wldt, Drive (Propel Model)	1
31	9014613*	(10000000- 20000000)	Controller Kit, Spd, Ci [T300/E/Ss300] (Propel Model)	1
32	04403	(10000000- 10813435)	Screw, Pan, Phl, M4 X 0.70 X 25, Nl, Ss (Propel Model)	2
33	1034731	(10000000- 10813435)	Screw, Hex, M6 X 1.00 X 16, Sems, Ss (Propel Model)	2
34	41140	(10000000- 10813435)	Washer, Lock, Int- Ext, 0.25 (Propel Model)	1
35	09739	(10000000- 20000000)	Nut, Hex, Lock, M5 X 0.80, Nl, Ss	2
36	01683	(10000000- 20000000)	Washer, Flat, 10, Ss	2
37	1012216	(10000000- 20000000)	Relay, 24vdc, 070a, Spst No, Plug- In	2
38	1208628	(10000000- 20000000)	Gasket, Cover, Circuitboard	1
39	1034731	(10813436- 20000000)	Screw, Hex, M6 X 1.00 X 16, Sems, Ss	1
40	41140	(10813436- 20000000)	Washer, Lock, Int- Ext, 0.25	1
41	1223824	(10813436- 20000000)	Bracket Wldt, Mtg, Cntrl, [T300/T300e]	1
42	02938	(10813436- 20000000)	Washer, Lock, Int, 08, Ss	2
43	33931	(10813436- 20000000)	Screw, Pan, Phl, M4 X 0.70 X 30, Ss	2
44	02850	(10000000- xxxxxxxx)	Nut, Hex, Lock, M4 X 0.70, Nl	2
45	07515	(10000000- 20000000)	Washer, Lock, Int, 0.25, Ss	1
46	1205799	(10000000- 20000000)	Screw, Btn, M5 X 0.8 X 16, 8.8, Nl, Torx	1

*** Requires Tennant *True* service or an authorized Tennant service provider**.

LOWER CONSOLE GROUP, ON- BOARD CHARGER

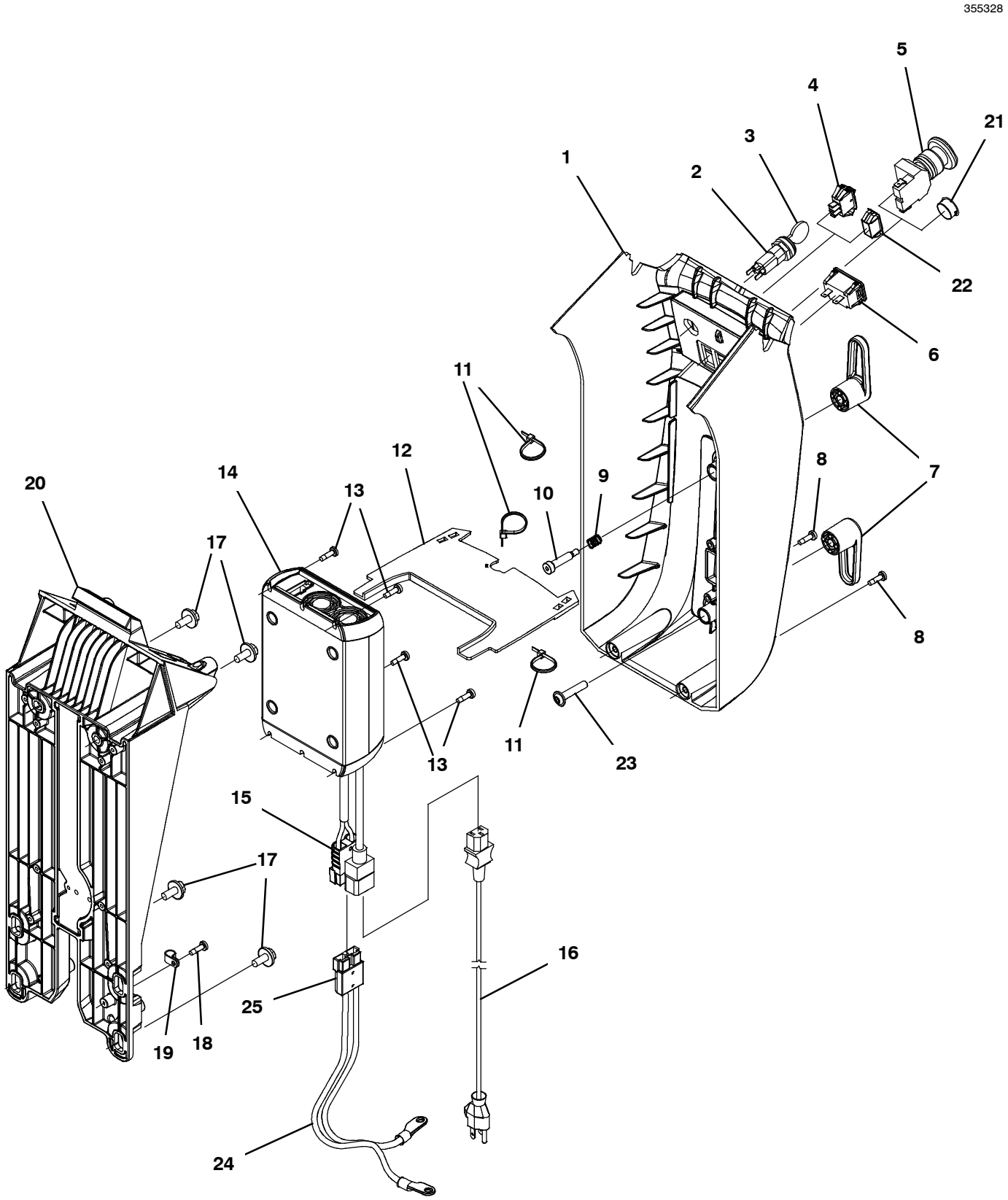

LOWER CONSOLE GROUP, ON-BOARD CHARGER

	Ref.	Part No.	Serial Number	Description	Qty.
	1	9012789	(10000000-20000000)	Cover, Console, Afmkt, W/ Label [Na]	1
	1	9012790	(10000000-20000000)	Cover, Console, Afmkt, W/ Label [Jp]	1
∇	2	1011402	(10000000-20000000)	Switch, Key	1
▲	3	1017696	(10000000-20000000)	Key Set, Replmt [F/ Keyswitch 1011402]	1
	4	1044393	(10000000-20000000)	Switch, Rocker, Spst Mom (ec-H2O Option)	1
	5	1011735	(10000000-20000000)	Switch, Safety, Shutoff (Propel Model)	1
	6	1064038	(10000000-20000000)	Gauge, Hourmeter, 05-277 Volt, Ac / Dc	1
	7	1205496	(10000000-20000000)	Hook, Cord	2
	8	1043573	(10795905-20000000)	Screw, #10-14 X 0.675, Spl[Shcs,Selftap]	2
	8	1205799	(10000000-10795904)	Screw, Btn, M5 X 0.8 X 16, 8.8, Nl, Torx	2
	9	611311	(10982683-20000000)	Spring, Cmpr, 0.40od .05wir 00.5l, Pl,Mw	1
	9	611311	(10000000-10982682)	Spring, Cmpr, 0.40od .05wir 00.5l, Pl,Mw	2
	10	1024965	(10982683-20000000)	Bolt, Shld, 08mmd X 030mm, M06 X 1.0	1
	10	1024965	(10000000-10982682)	Bolt, Shld, 08mmd X 030mm, M06 X 1.0	2
	11	130773	(10000000-20000000)	Tie, Cable, Nyl, 11.0l, .14w, 3.0 Max. D	3
	12	1211582	(10000000-20000000)	Cover, Chrgr [Small Spe]	1
	13	1043573	(10795905-20000000)	Screw, #10-14 X 0.675, Spl[Shcs,Selftap]	4
	13	1205799	(10000000-10795904)	Screw, Btn, M5 X 0.8 X 16, 8.8, Nl, Torx	4
∇	14	9015304	(10000000-20000000)	Charger Kit, 24vdc 13a 100-240vac[On-Bd] (North America Only)	1
∇	14	1243129	(10000000-20000000)	Charger, 24vdc 13a 100-240vac [On Brd]	1
▲	15	605387	(10000000-20000000)	Connector, Anderson, 050a, Red [W/O Con]	1
	16	1025642	(10000000-20000000)	Cord, Power, 16/3, 15ft Blk [Us]	1
	16	1026330	(10000000-20000000)	Cord, Power, 1.0mm2 [2.5meter] (China)	1
	16	1026325	(10000000-20000000)	Cord, Power, 1.0mm2/3 Blk[2.5meter, Aus]	1
	16	1048304	(10000000-20000000)	Cord, Power [4.5meter, India, S.Africa]	1
	17	1020341	(10000000-20000000)	Screw, Hex, M8 X 1.25 X 20, Ss, Sems	4
	18	1043573	(10795905-20000000)	Screw, #10-14 X 0.675, Spl[Shcs,Selftap]	1
	18	1205799	(10000000-10795904)	Screw, Btn, M5 X 0.8 X 16, 8.8, Nl, Torx	1
	19	26395-2	(10000000-20000000)	Clamp, Cable, Stl, 0.38d X 0.38w, 1hole	1
	20	1231373	(10795905-20000000)	Frame, Column, Cntrl [Im], T600	1
	20	1216531	(10000000-10795904)	Frame, Column, Cntrl [Revised Machined]	1
	21	130161	(10000000-20000000)	Plug, Hole, Rnd, 0.88d, Blk (Push Model)	1
	22	582150	(10000000-20000000)	Plug, Hole, Rt, 1.23 X 1.12, Nyl (Standard Model)	1
	23	1248098	(10982683-20000000)	Screw, Btn, Flng, M6 X 1.0 X 30, 10.9	1
∇	24	1073634	(10000000-20000000)	Harness, Chrgr, 12ga [M8 Ring/M8 Ring]	1
▲	25	605387	(10000000-20000000)	Connector, Anderson, 050a, Red [W/O Con]	1

∇ ASSEMBLY

▲ INCLUDED IN ASSEMBLY

LOWER CONSOLE GROUP, OFF- BOARD CHARGER

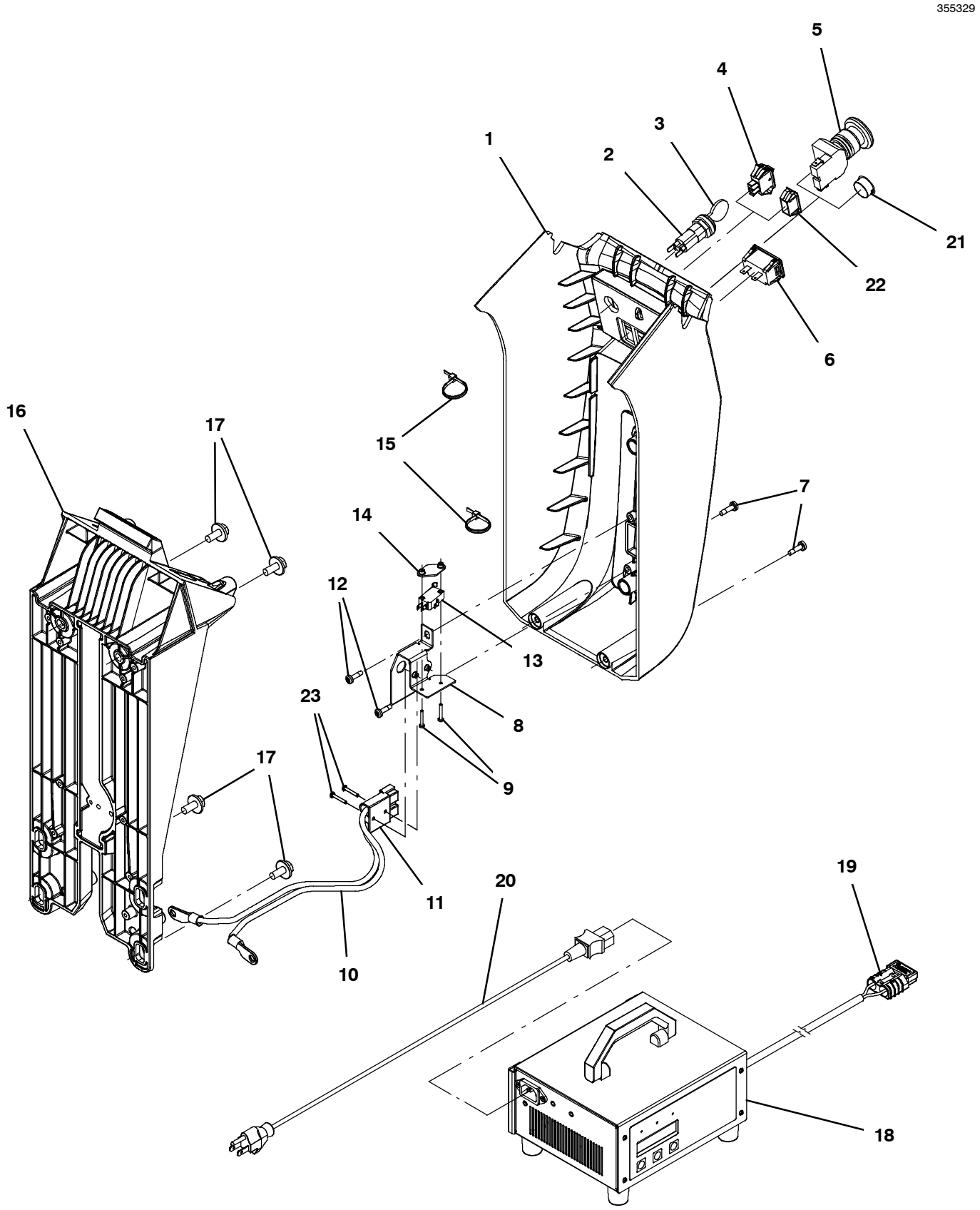

LOWER CONSOLE GROUP, OFF- BOARD CHARGER

	Ref.	Part No.	Serial Number	Description	Qty.
	1	9012789	(10000000- 20000000)	Cover, Console, Afmkt, W/ Label [Na]	1
	1	9012790	(10000000- 20000000)	Cover, Console, Afmkt, W/ Label [Jp]	1
∇	2	1011402	(10000000- 20000000)	Switch, Key	1
▲	3	1017696	(10000000- 20000000)	Key Set, Replmt [F/ Keyswitch 1011402]	1
	4	1044393	(10000000- 20000000)	Switch, Rocker, Spst Mom (ec- H2O Model)	1
	5	1011735	(10000000- 20000000)	Switch, Safety, Shutoff (Propel Model)	1
	6	1064038	(10000000- 20000000)	Gauge, Hourmeter, 05- 277 Volt, Ac / Dc	1
	7	1043573	(10795905- 20000000)	Screw, #10- 14 X 0.675, Spl[Shcs,Selftap]	2
	7	1205799	(10000000- 10795904)	Screw, Btn, M5 X 0.8 X 16, 8.8, Nl, Torx	2
	8	1208599	(10000000- 20000000)	Bracket Assy, Plug, Charger	1
	9	06922	(10000000- 20000000)	Screw, Pan, Phl, M3 X 0.50 X 20, 4.8	2
∇	10	1073634	(10000000- 20000000)	Harness, Chrgr, 12ga [M8 Ring/M8 Ring]	1
▲	11	605387	(10000000- 20000000)	Connector, Anderson, 050a, Red [W/O Con]	1
	12	1043573	(10000000- 20000000)	Screw, #10- 14 X 0.675, Spl[Shcs,Selftap]	2
	13	1215716	(10000000- 20000000)	Switch, 0.1a, Spdt[Micro, Gold Contacts]	1
	14	1013705	(10000000- 20000000)	Plate, Thread, Switch, M3 Nut, 96hr Pl	1
	15	130773	(10000000- 20000000)	Tie, Cable, Nyl, 11.0l, .14w, 3.0 Max. D	2
	16	1231373	(10795905- 20000000)	Frame, Column, Cntrl [Im], T600	1
	16	1216531	(10000000- 10795904)	Frame, Column, Cntrl [Revised Machined]	1
	17	1020341	(10000000- 20000000)	Screw, Hex, M8 X 1.25 X 20, Ss, Sems	4
∇	18	1212837	(10000000- 20000000)	Charger, 24vdc, 13a 85- 265vac [Offboard]	1
▲	19	605387	(10000000- 20000000)	Connector, Anderson, 050a, Red [W/O Con]	1
	20	1025642	(10000000- 20000000)	Cord, Power, 16/3, 15ft Blk [Us]	1
	20	1026330	(10000000- 20000000)	Cord, Power, 1.0mm2 [2.5meter] (China)	1
	20	1026325	(10000000- 20000000)	Cord, Power, 1.0mm2/3 Blk[2.5meter, Aus]	1
	20	1048304	(10000000- 20000000)	Cord, Power [4.5meter, India, S.Africa]	1
	21	130161	(10000000- 20000000)	Plug, Hole, Rnd, 0.88d, Blk (Push Model)	1
	22	582150	(10000000- 20000000)	Plug, Hole, Rt, 1.23 X 1.12, Nyl (Standard Model)	1
	23	06922	(10000000- 20000000)	Screw, Pan, Phl, M3 X 0.50 X 20, 4.8	2

∇ ASSEMBLY

▲ INCLUDED IN ASSEMBLY

HANDLE GROUP, BASE PROPEL MODEL

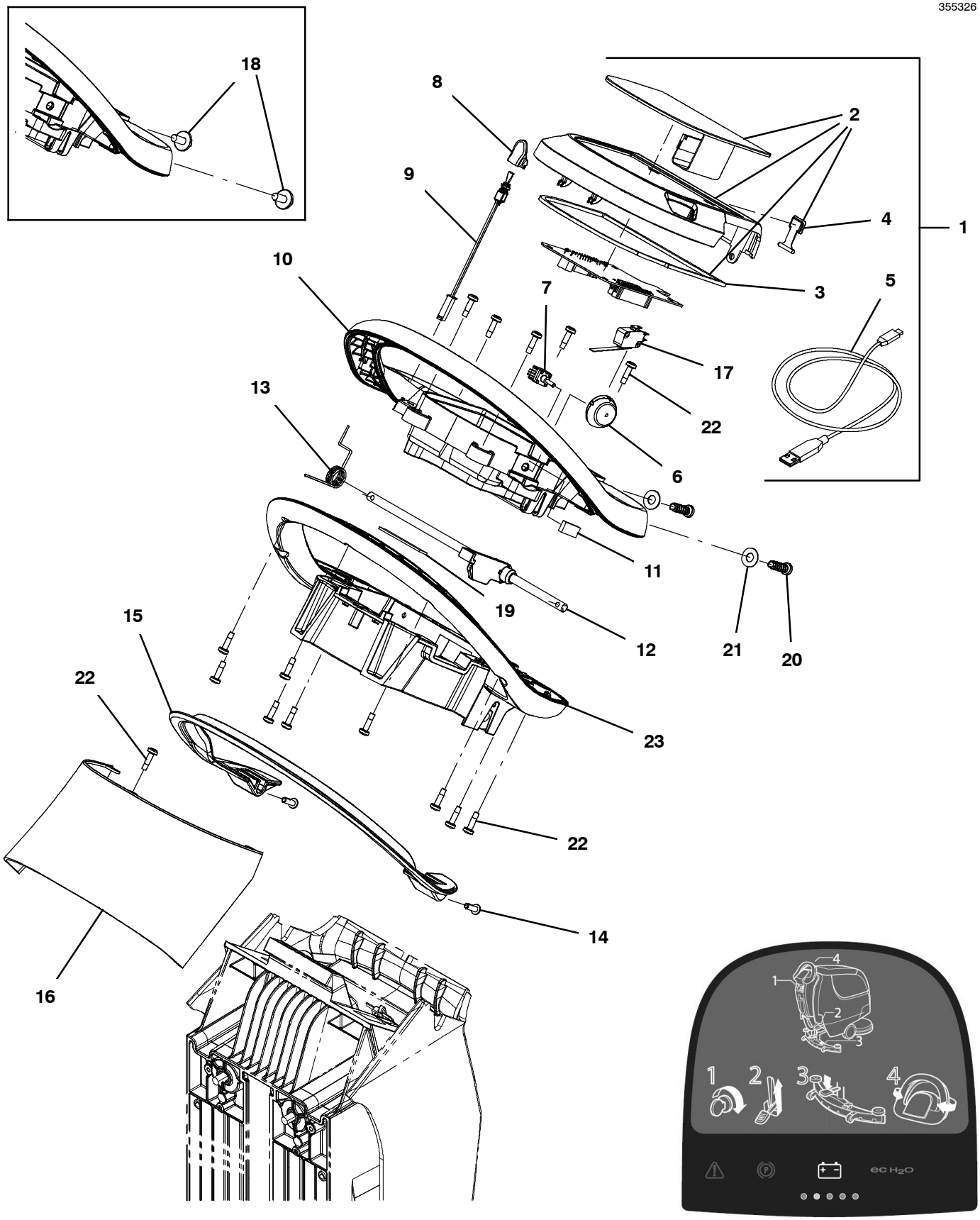

HANDLE GROUP, BASE PROPEL MODEL

	Ref.	Part No.	Serial Number	Description	Qty.
∇	1	9014131*	(10000000- 20000000)	Bezel Kit, Propel, Membrane, Ci [T300e/S (Kit Includes Circuitboard)	1
▲∇	2	9014137	(10000000- 20000000)	Screen Kit, Propel, Memb., Ci [T300e/Ss]	1
▲▲	3	1245824	(MAR2020- 20000000)	Gasket, Console	1
▲▲	4	1205618	(10000000- 20000000)	Cap, Usb	1
▲	5	1071235	(10000000- 20000000)	Cable [Usb, 2m, A- Male To Mini- B- Male]	1
	6	1234365	(10000000- 20000000)	Dial, Range, Speed	1
	7	1246392	(10947955- 20000000)	Potentiometer [100k, 1 Turn, Multi- Mach]	1
	7	1204930	(10000000- 10947954)	Potentiometer [100k, 1 Turn, B5/B7] (Replaced By 1246392)	1
	8	1209730	(10000000- 20000000)	Cap, Toggle, Direction	1
	9	1209673	(10000000- 20000000)	Switch Assy, Toggle, Direction	1
	10	1203787	(10000000- 20000000)	Housing, Handle, Cntrl, Top	1
	11	1063909	(MAR2020- 20000000)	Seal, Afmkt, Rbr, Clsd, Adh, 01ft	1
	12	1205143	(10000000- 20000000)	Shaft Assy, Bail, Handle	1
	13	1205781	(10000000- 20000000)	Spring, Return, Bail	1
	14	1205799	(10000000- 20000000)	Screw, Btn, M5 X 0.8 X 16, 8.8, Nl, Torx	2
	15	1205778	(10000000- 20000000)	Handle, Bail [Machined]	1
	16	1207004	(10000000- 20000000)	Cover, Handle, Cntrl	1
	17	1205323	(10000000- 20000000)	Switch, 0.1a, Spdt [Micro, Straight]	1
	18	1020341	(10000000- 10795904)	Screw, Hex, M8 X 1.25 X 20, Ss, Sems	2
	19	1020280	(10000000- 20000000)	Seal, Afmkt, Rbr, Clsd, Adh, 01ft	1
	20	1215863	(10795905- 20000000)	Screw, Pan, Torx, M8 X 3.5 X 25[Remform]	2
	21	140027	(10795905- 20000000)	Washer, Flat, 0.35b 0.75d .04, Ss	2
	22	1043573	(10000000- 20000000)	Screw, #10- 14 X 0.675, Spl[Shcs,Selftap]	15
	23	1222608	(10000000- 20000000)	Housing, Handle, Cntrl, Bottom, Slotted	1
	N/S	1072524	(10000000- 20000000)	Harness, Ele [Bail Switch]	1

*** Requires Tennant *True* service or an authorized Tennant service provider**.

∇ ASSEMBLY

▲ INCLUDED IN ASSEMBLY

HANDLE GROUP, BASE PUSH MODEL

355327

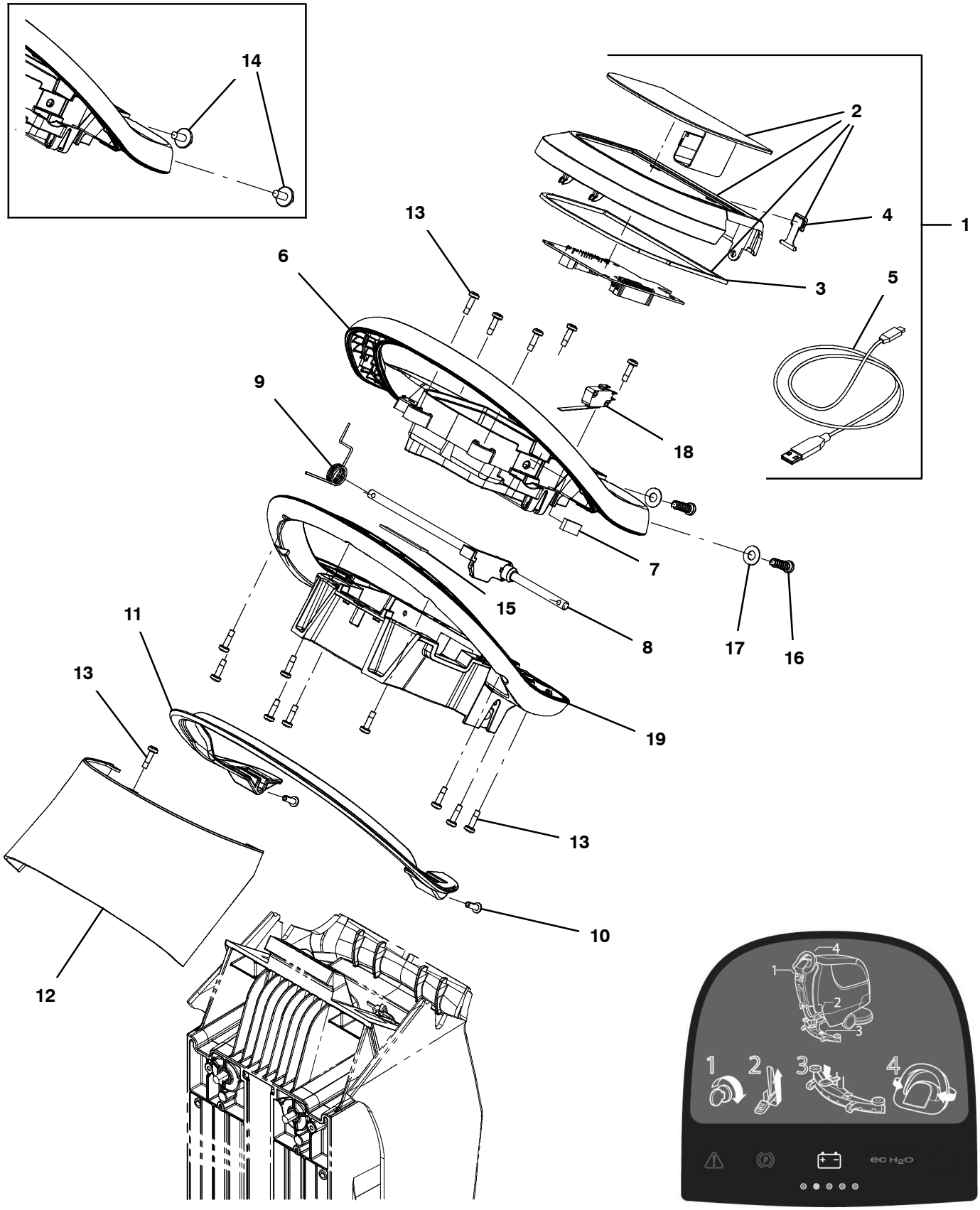

HANDLE GROUP, BASE PUSH MODEL

	Ref.	Part No.	Serial Number	Description	Qty.
∇	1	9014130*	(10000000- 20000000)	Bezel Kit, Push, Membrane, Ci [T300e/Ss] (Kit Includes Circuitboard)	1
▲∇	2	9014136	(10000000- 20000000)	Screen Kit, Push, Memb., Ci [T300e/Ss]	1
▲▲	3	1245824	(MAR2020- 20000000)	Gasket, Console	1
▲▲	4	1205618	(10000000- 20000000)	Cap, Usb	1
▲	5	1071235	(10000000- 20000000)	Cable [Usb, 2m, A- Male To Mini- B- Male]	1
	6	1203787	(10000000- 20000000)	Housing, Handle, Cntrl, Top	1
	7	1063909	(MAR2020- 20000000)	Seal, Afmkt, Rbr, Clsd, Adh, 01ft	1
	8	1205143	(10000000- 20000000)	Shaft Assy, Bail, Handle	1
	9	1205781	(10000000- 20000000)	Spring, Return, Bail	1
	10	1205799	(10000000- 20000000)	Screw, Btn, M5 X 0.8 X 16, 8.8, Nl, Torx	2
	11	1205778	(10000000- 20000000)	Handle, Bail [Machined]	1
	12	1207004	(10000000- 20000000)	Cover, Handle, Cntrl	1
	13	1043573	(10000000- 20000000)	Screw, #10- 14 X 0.675, Spl[Shcs,Selftap]	15
	14	1020341	(10000000- 10795904)	Screw, Hex, M8 X 1.25 X 20, Ss, Sems	2
	15	1020280	(10000000- 20000000)	Seal, Afmkt, Rbr, Clsd, Adh, 01ft	1
	16	1215863	(10795905- 20000000)	Screw, Pan, Torx, M8 X 3.5 X 25[Remform]	2
	17	140027	(10795905- 20000000)	Washer, Flat, 0.35b 0.75d .04, Ss	2
	18	1205323	(10000000- 20000000)	Switch, 0.1a, Spdt [Micro, Straight]	1
	19	1222608	(10000000- 20000000)	Housing, Handle, Cntrl, Bottom, Slotted	1
	N/S	1072524	(10000000- 20000000)	Harness, Ele [Bail Switch]	1

*** Requires Tennant *True* service or an authorized Tennant service provider**.

∇ ASSEMBLY

▲ INCLUDED IN ASSEMBLY

SHROUD GROUP, DISK AND ORBITAL HEAD

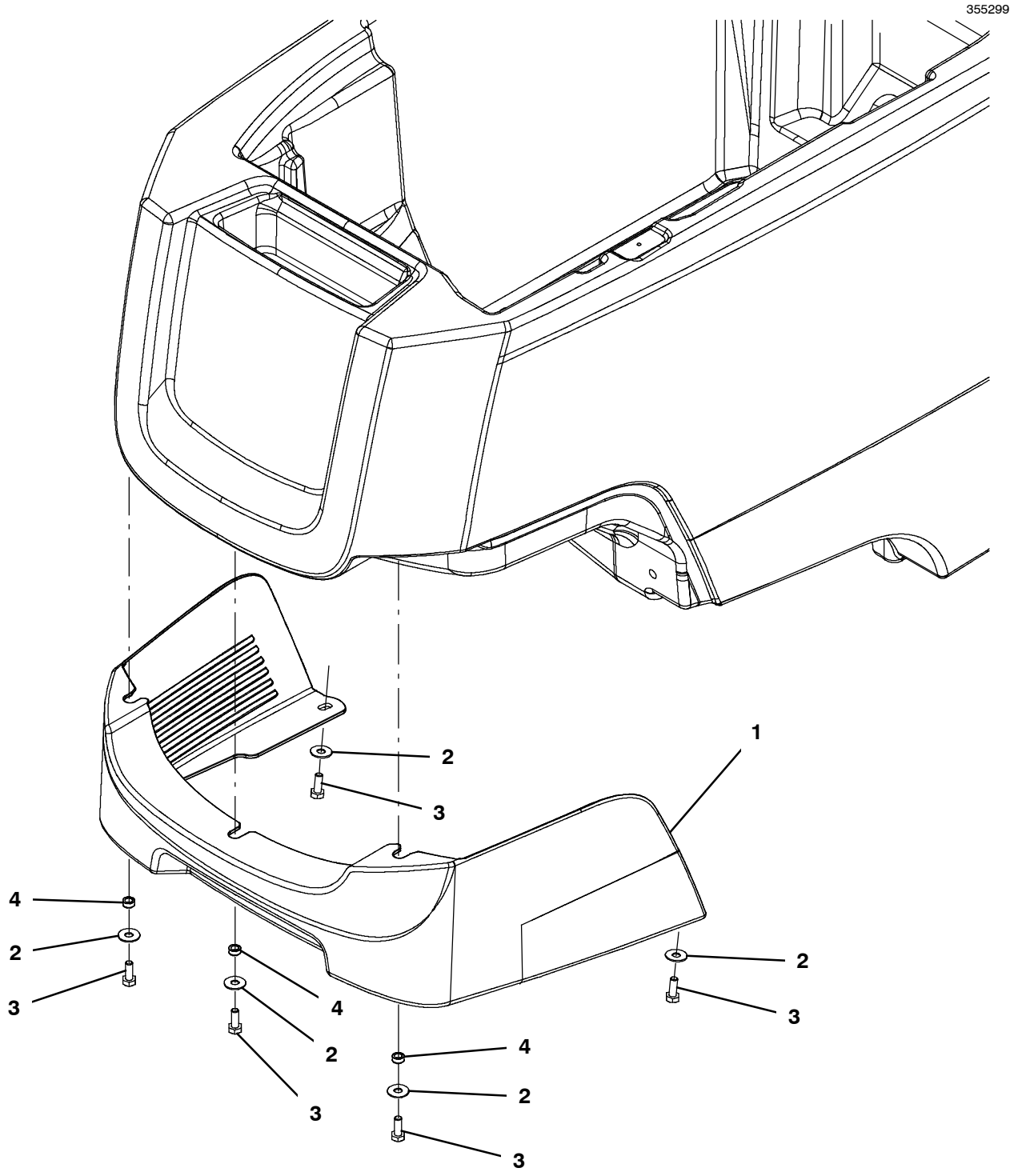

SHROUD GROUP, DISK AND ORBITAL HEAD

Ref.	Part No.	Serial Number	Description	Qty.
1	1210029	(10000000- 20000000)	Cover, Head, Disk, Im- Hg [T300]	1
2	01684	(10000000- 20000000)	Washer, Flat, 0.27b 0.69d .05, Ss	5
3	11329	(10000000- 20000000)	Screw, Hex, M6 X 1.00 X 16, Nl, Ss	5
4	80491	(10000000- 20000000)	Sleeve, P/M, 0.25b 0.38d 0.2l [430ss]	3

SHROUD GROUP, CYLINDRICAL HEAD

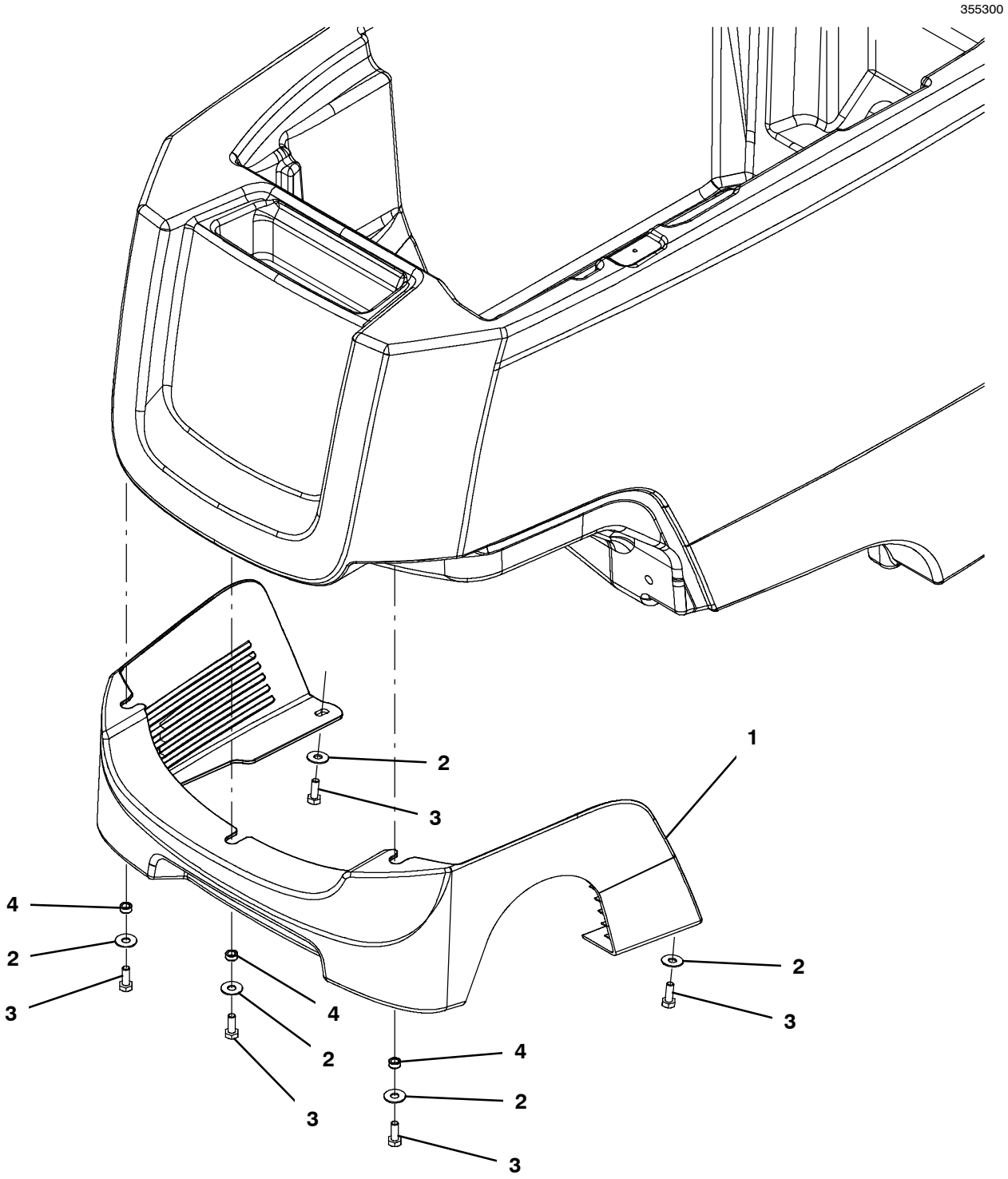

SHROUD GROUP, CYLINDRICAL HEAD

Ref.	Part No.	Serial Number	Description	Qty.
1	1213570	(10000000- 20000000)	Cover, Head, Cylrcl, Im- Hg [T300]	1
2	01684	(10000000- 20000000)	Washer, Flat, 0.27b 0.69d .05, Ss	5
3	11329	(10000000- 20000000)	Screw, Hex, M6 X 1.00 X 16, Nl, Ss	5
4	80491	(10000000- 20000000)	Sleeve, P/M, 0.25b 0.38d 0.2l [430ss]	3

SCRUB HEAD LIFT GROUP, 43CM DISK MODEL

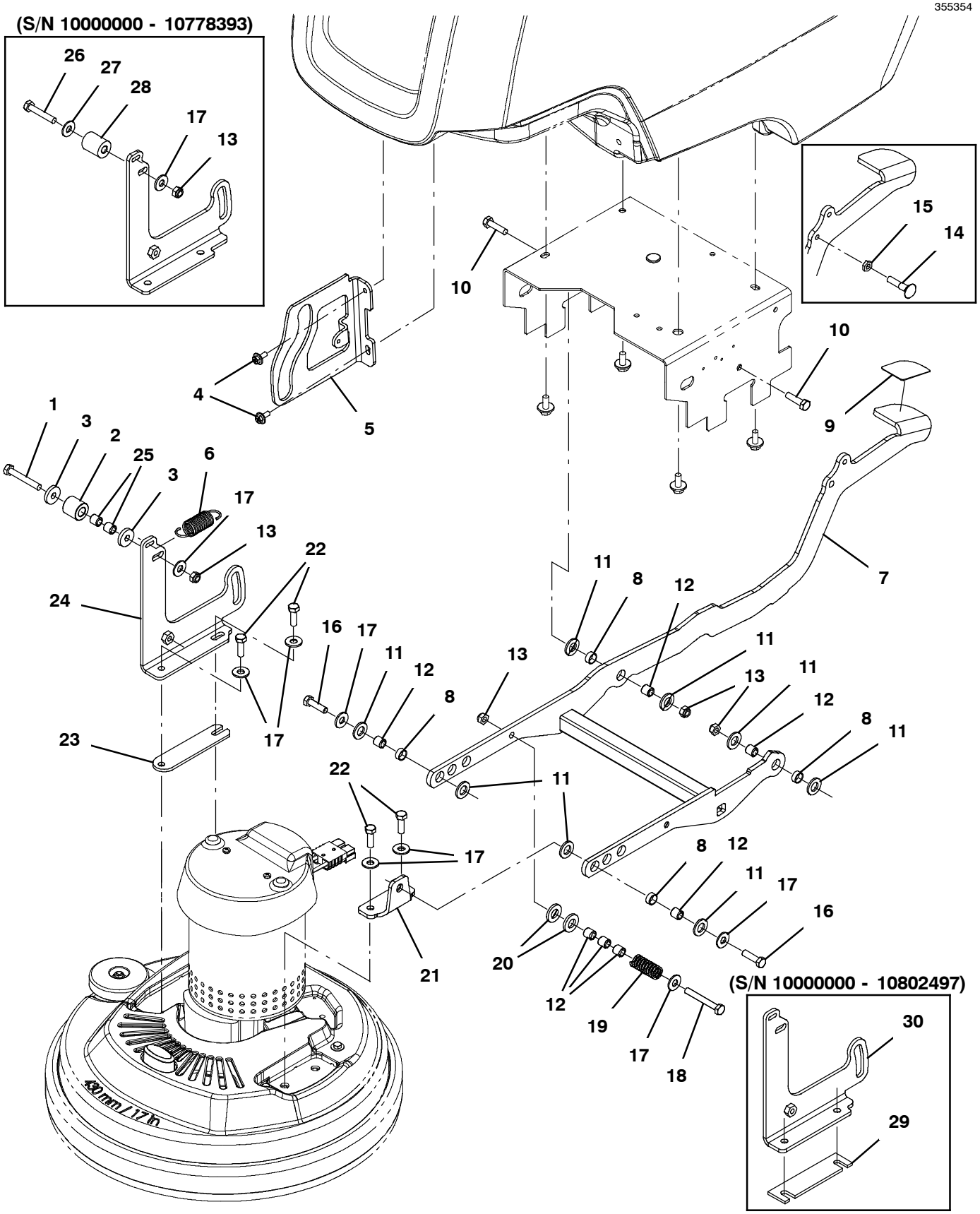

SCRUB HEAD LIFT GROUP, 43CM DISK MODEL

	Ref.	Part No.	Serial Number	Description	Qty.
	1	222504	(10778394- 20000000)	Screw, Hex, M8 X 1.25 X 55, Ss	1
	2	1028796	(10778394- 20000000)	Washer, Flat, 0.33b 1.00d .18, Stl, Pl	2
	3	1014020	(10778394- 20000000)	Roller, 0.99d 0.50b 0.95l, Acetal	1
	4	1034731	(10000000- 20000000)	Screw, Hex, M6 X 1.00 X 16, Sems, Ss	2
	5	1213063	(10000000- 20000000)	Bracket, Guide, Head [Vw]	1
	6	1032420	(10000000- 20000000)	Spring, Extn, 0.85od 0.09wir 02.9l	1
∇	7	9016811	(10887017- 20000000)	Kit, Lift, Head, Ci [T300/T300e/Ss300]	1
▲	8	630188	(10000000- 20000000)	Bearing, Journal, .50id X .25l	8
∇	7	9014170	(10000000- 10887016)	Kit, Lift, Head[T300/T300e/Ss300] (Replaced by 9016811)	1
▲	8	630188	(10000000- 20000000)	Bearing, Journal, .50id X .25l	8
	9	1218694	(10000000- 20000000)	Pad, Pedal, Lift	1
	10	09011	(10000000- 20000000)	Screw, Hex, M8 X 1.25 X 30, Ss	2
	11	1013936	(10000000- 20000000)	Washer, Flat, 0.51b 0.94d .10, Nyl	8
	12	222460	(10000000- 20000000)	Sleeve, P/M, 0.32b 0.50d 0.5l [430ss]	7
	13	08713	(10000000- 20000000)	Nut, Hex, Lock, M8 X 1.25, Nl, Ss	4
	14	1235108	(10000000- JAN2020)	Bolt, Carriage, M8 X 1.25 X 90, Fl	1
	15	200101017	(10000000- JAN2020)	Nut, Hex, Jam, M8 X 1.25	1
	16	1016399	(10000000- 20000000)	Screw, Hex, M8 X 1.25 X 30, Nl, Ss	2
	17	01685	(10000000- 20000000)	Washer, Flat, 0.38b 0.88d .08, Ss	8
	18	1014163	(10000000- 20000000)	Screw, Hex, M8 X 1.25 X 60, Fl, Ss	1
	19	140430	(10000000- 20000000)	Spring, Cmpr, 0.70od .10wir 01.7l	1
	20	140127	(10000000- 20000000)	Washer, Thrust, 0.51b 1.00d 0.12w, Brz	2
	21	1210258	(10000000- 20000000)	Bracket Wldt, Head Mtg, 43d/50d, Short	1
	22	12333	(10000000- 20000000)	Screw, Hex, M8 X 1.25 X 25, Ss, Nl	4
	23	1223982	(10802498- 20000000)	Spacer, Head, 4mm (Push Model)	1
	24	1223962	(10802498- 20000000)	Bracket Wldt, Mtg, Head, 43d/50d, Tall	1
	25	222460	(10778394- 20000000)	Sleeve, P/M, 0.32b 0.50d 0.5l [430ss]	2
	26	49694	(10000000- 10778393)	Screw, Hex, M8 X 1.25 X 50, Ss	1
	27	01685	(10000000- 10778393)	Washer, Flat, 0.38b 0.88d .08, Ss	1
	28	1214039	(10000000- 10778393)	Roller, Lift, Head	1
	29	1032791	(10000000- 10802497)	Spacer, Head, 4mm [Ss3] (Push Model)	1
	30	1210256	(10000000- 10802497)	Bracket Wldt, Mtg, Head, 50d, Tall [Vw] (Replaced By 1223962)	1

∇ ASSEMBLY

▲ INCLUDED IN ASSEMBLY

SCRUB HEAD LIFT GROUP, 50CM DISK MODEL

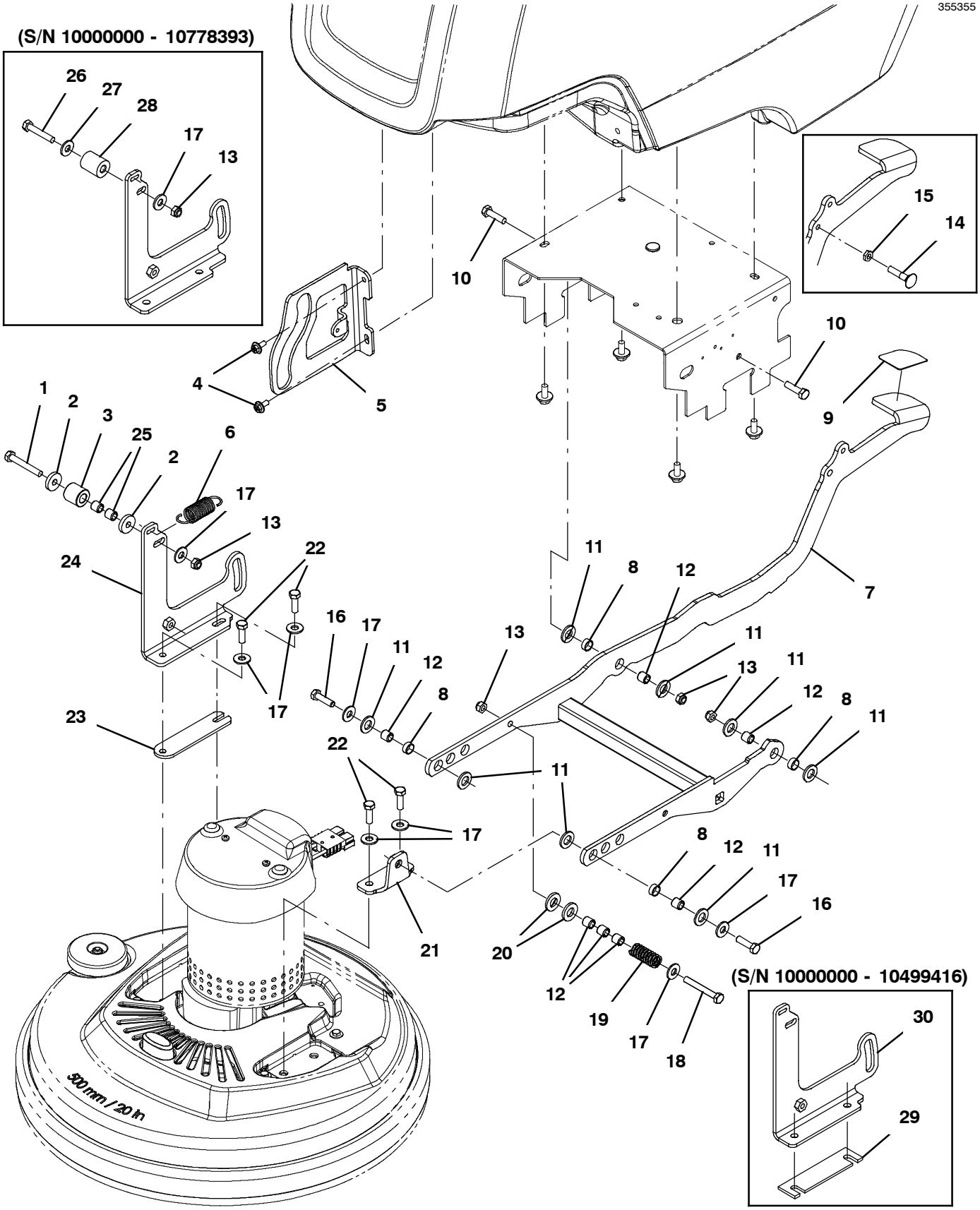

SCRUB HEAD LIFT GROUP, 50CM DISK MODEL

	Ref.	Part No.	Serial Number	Description	Qty.
	1	222504	(10778394- 20000000)	Screw, Hex, M8 X 1.25 X 55, Ss	1
	2	1028796	(10778394- 20000000)	Washer, Flat, 0.33b 1.00d .18, Stl, Pl	2
	3	1014020	(10778394- 20000000)	Roller, 0.99d 0.50b 0.95l, Acetal	1
	4	1034731	(10000000- 20000000)	Screw, Hex, M6 X 1.00 X 16, Sems, Ss	2
	5	1213063	(10000000- 20000000)	Bracket, Guide, Head [Vw]	1
	6	1032420	(10000000- 20000000)	Spring, Extn, 0.85od 0.09wir 02.9l	1
∇	7	9016811	(10887017- 20000000)	Kit, Lift, Head, Ci [T300/T300e/Ss300]	1
▲	8	630188	(10000000- 20000000)	Bearing, Journal, .50id X .25l	8
∇	7	9014170	(10000000- 10887016)	Kit, Lift, Head[T300/T300e/Ss300] (Replaced by 9016811)	1
▲	8	630188	(10000000- 20000000)	Bearing, Journal, .50id X .25l	8
	9	1218694	(10000000- 20000000)	Pad, Pedal, Lift	1
	10	09011	(10000000- 20000000)	Screw, Hex, M8 X 1.25 X 30, Ss	2
	11	1013936	(10000000- 20000000)	Washer, Flat, 0.51b 0.94d .10, Nyl	8
	12	222460	(10000000- 20000000)	Sleeve, P/M, 0.32b 0.50d 0.5l [430ss]	7
	13	08713	(10000000- 20000000)	Nut, Hex, Lock, M8 X 1.25, Nl, Ss	4
	14	1235108	(10000000- JAN2020)	Bolt, Carriage, M8 X 1.25 X 90, Fl	1
	15	200101017	(10000000- JAN2020)	Nut, Hex, Jam, M8 X 1.25	1
	16	1016399	(10000000- 20000000)	Screw, Hex, M8 X 1.25 X 30, Nl, Ss	2
	17	01685	(10000000- 20000000)	Washer, Flat, 0.38b 0.88d .08, Ss	8
	18	1014163	(10000000- 20000000)	Screw, Hex, M8 X 1.25 X 60, Fl, Ss	1
	19	140430	(10000000- 20000000)	Spring, Cmpr, 0.70od .10wir 01.7l	1
	20	140127	(10000000- 20000000)	Washer, Thrust, 0.51b 1.00d 0.12w, Brz	2
	21	1210258	(10000000- 20000000)	Bracket Wldt, Head Mtg, 43d/50d, Short	1
	22	12333	(10000000- 20000000)	Screw, Hex, M8 X 1.25 X 25, Ss, Nl	4
	23	1223982	(10499417- 20000000)	Spacer, Head, 4mm (Push Model)	1
	24	1223962	(10499417- 20000000)	Bracket Wldt, Mtg, Head, 43d/50d, Tall	1
	25	222460	(10778394- 20000000)	Sleeve, P/M, 0.32b 0.50d 0.5l [430ss]	2
	26	49694	(10000000- 10778393)	Screw, Hex, M8 X 1.25 X 50, Ss	1
	27	01685	(10000000- 10778393)	Washer, Flat, 0.38b 0.88d .08, Ss	1
	28	1214039	(10000000- 10778393)	Roller, Lift, Head	1
	29	1032791	(10000000- 10499416)	Spacer, Head, 4mm [Ss3] (Push Model)	1
	30	1210256	(10000000- 10499416)	Bracket Wldt, Mtg, Head, 50d, Tall [Vw] (Replaced By 1223962)	1

∇ ASSEMBLY

▲ INCLUDED IN ASSEMBLY

SCRUB HEAD LIFT GROUP, 60CM DUAL DISK MODEL

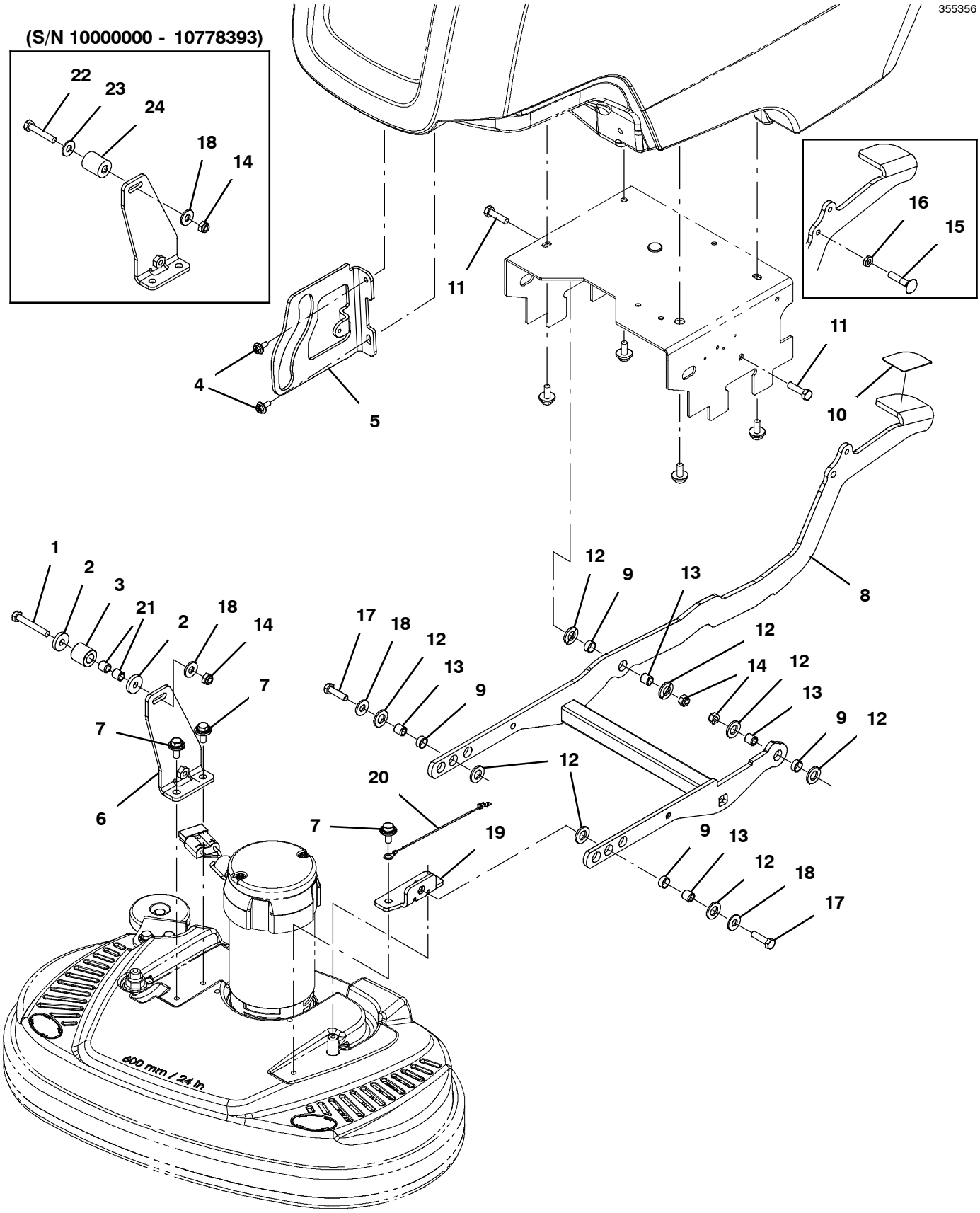

SCRUB HEAD LIFT GROUP, 60CM DUAL DISK MODEL

	Ref.	Part No.	Serial Number	Description	Qty.
	1	222504	(10778394- 20000000)	Screw, Hex, M8 X 1.25 X 55, Ss	1
	2	1028796	(10778394- 20000000)	Washer, Flat, 0.33b 1.00d .18, Stl, Pl	2
	3	1014020	(10778394- 20000000)	Roller, 0.99d 0.50b 0.95l, Acetal	1
	4	1034731	(10000000- 20000000)	Screw, Hex, M6 X 1.00 X 16, Sems, Ss	2
	5	1213063	(10000000- 20000000)	Bracket, Guide, Head [Vw]	1
	6	1213220	(10000000- 20000000)	Bracket Wldt, Mtg, Head, 60dd, Tall [Vw]	1
	7	1020341	(10000000- 20000000)	Screw, Hex, M8 X 1.25 X 20, Ss, Sems	3
∇	8	9016811	(10887017- 20000000)	Kit, Lift, Head, Ci [T300/T300e/Ss300]	1
▲	9	630188	(10000000- 20000000)	Bearing, Journal, .50id X .25l	8
∇	8	9014170	(10000000- 10887016)	Kit, Lift, Head[T300/T300e/Ss300] (Replaced by 9016811)	1
▲	9	630188	(10000000- 20000000)	Bearing, Journal, .50id X .25l	8
	10	1218694	(10000000- 20000000)	Pad, Pedal, Lift	1
	11	09011	(10000000- 20000000)	Screw, Hex, M8 X 1.25 X 30, Ss	2
	12	1013936	(10000000- 20000000)	Washer, Flat, 0.51b 0.94d .10, Nyl	8
	13	222460	(10000000- 20000000)	Sleeve, P/M, 0.32b 0.50d 0.5l [430ss]	4
	14	08713	(10000000- 20000000)	Nut, Hex, Lock, M8 X 1.25, Nl, Ss	3
	15	1235108	(10000000- JAN2020)	Bolt, Carriage, M8 X 1.25 X 90, Fl	1
	16	200101017	(10000000- JAN2020)	Nut, Hex, Jam, M8 X 1.25	1
	17	1016399	(10000000- 20000000)	Screw, Hex, M8 X 1.25 X 30, Nl, Ss	2
	18	01685	(10000000- 20000000)	Washer, Flat, 0.38b 0.88d .08, Ss	3
	19	1213224	(10000000- 20000000)	Bracket Wldt, Mtg, Head, 60dd, Short[Vw]	1
	20	1074344	(10000000- 20000000)	Harness, Ele [Ring With .250m Tail]	4
	21	222460	(10778394- 20000000)	Sleeve, P/M, 0.32b 0.50d 0.5l [430ss]	2
	22	49694	(10000000- 10778393)	Screw, Hex, M8 X 1.25 X 50, Ss	1
	23	01685	(10000000- 10778393)	Washer, Flat, 0.38b 0.88d .08, Ss	1
	24	1214039	(10000000- 10778393)	Roller, Lift, Head	1

∇ ASSEMBLY

▲ INCLUDED IN ASSEMBLY

SCRUB HEAD LIFT GROUP, 50CM CYLINDRICAL MODEL

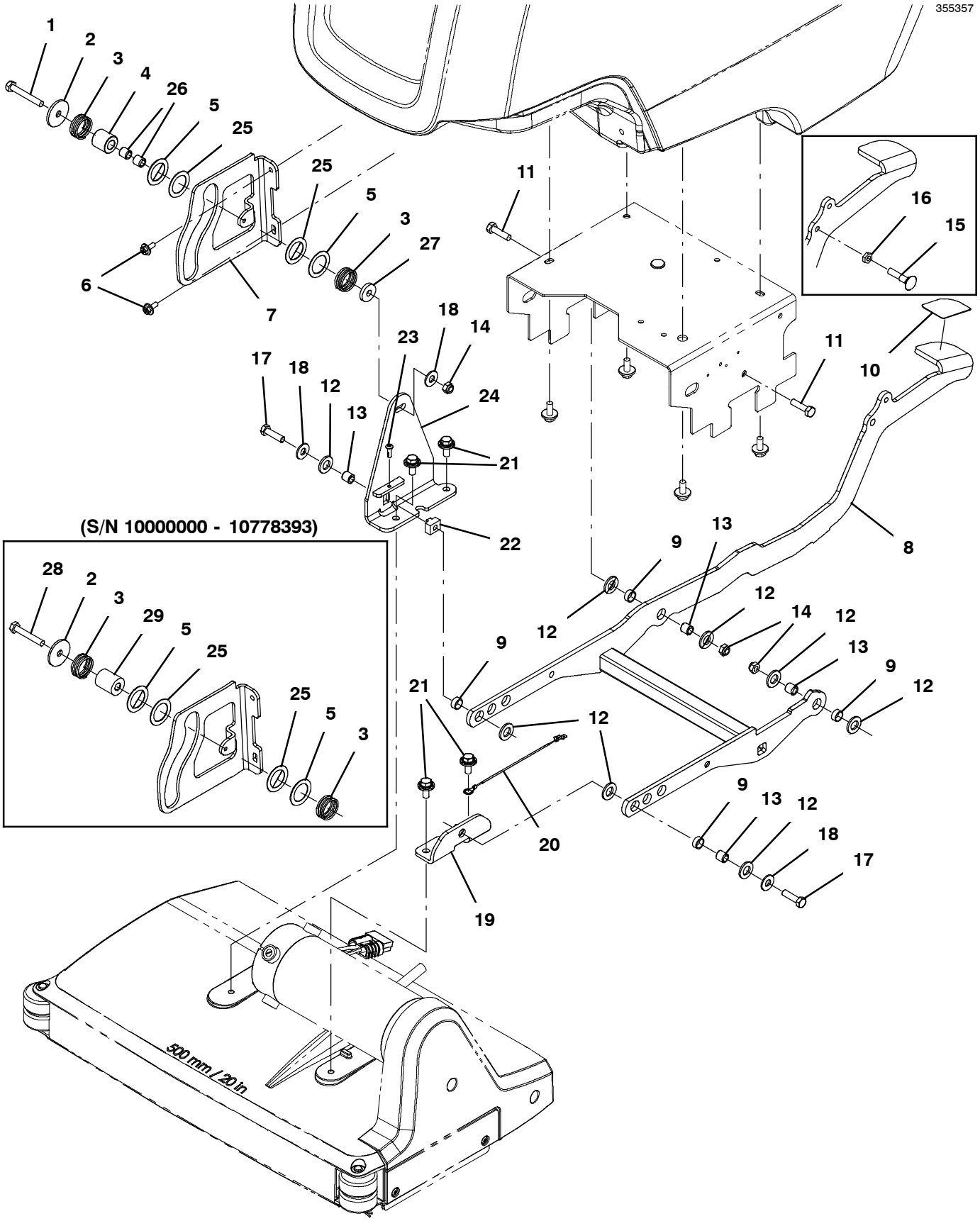

SCRUB HEAD LIFT GROUP, 50CM CYLINDRICAL MODEL

	Ref.	Part No.	Serial Number	Description	Qty.
	1	222504	(10778394- 20000000)	Screw, Hex, M8 X 1.25 X 55, Ss	1
	2	379829	(10000000- 20000000)	Washer, Flat, 0.34b 1.50d .12, Stl, Pl	1
	3	1210103	(10000000- 20000000)	Spring, Cmpr, 1.23od 0.085wir 0.88l	2
	4	1014020	(10778394- 20000000)	Roller, 0.99d 0.50b 0.95l, Acetal	1
	5	20955	(10000000- 20000000)	Washer, Flat, 1.03b 1.50d .04, Stl, Pl	2
	6	1034731	(10000000- 20000000)	Screw, Hex, M6 X 1.00 X 16, Sems, Ss	2
	7	1213063	(10000000- 20000000)	Bracket, Guide, Head [Vw]	1
∇	8	9016811	(10887017- 20000000)	Kit, Lift, Head, Ci [T300/T300e/Ss300]	1
▲	9	630188	(10000000- 20000000)	Bearing, Journal, .50id X .25l	8
∇	8	9014170	(10000000- 10887016)	Kit, Lift, Head[T300/T300e/Ss300] (Replaced by 9016811)	1
▲	9	630188	(10000000- 20000000)	Bearing, Journal, .50id X .25l	8
	10	1218694	(10000000- 20000000)	Pad, Pedal, Lift	1
	11	09011	(10000000- 20000000)	Screw, Hex, M8 X 1.25 X 30, Ss	2
	12	1013936	(10000000- 20000000)	Washer, Flat, 0.51b 0.94d .10, Nyl	8
	13	222460	(10000000- 20000000)	Sleeve, P/M, 0.32b 0.50d 0.5l [430ss]	4
	14	08713	(10000000- 20000000)	Nut, Hex, Lock, M8 X 1.25, Nl, Ss	3
	15	1235108	(10000000- JAN2020)	Bolt, Carriage, M8 X 1.25 X 90, Fl	1
	16	200101017	(10000000- JAN2020)	Nut, Hex, Jam, M8 X 1.25	1
	17	1016399	(10000000- 20000000)	Screw, Hex, M8 X 1.25 X 30, Nl, Ss	2
	18	01685	(10000000- 20000000)	Washer, Flat, 0.38b 0.88d .08, Ss	3
	19	1213226	(10000000- 20000000)	Bracket Wldt, Mtg, Head, 50cyl [Short]	1
	20	1074344	(10000000- 20000000)	Harness, Ele [Ring With .250m Tail]	1
	21	1020341	(10000000- 20000000)	Screw, Hex, M8 X 1.25 X 20, Ss, Sems	4
	22	1221434	(10000000- 20000000)	Nut, T, M8 X 1.25, Pm Ss [B5/B7, T300]	1
	23	1205799	(10000000- 20000000)	Screw, Btn, M5 X 0.8 X 16, 8.8, Nl, Torx	1
	24	1216222	(10000000- 20000000)	Bracket Wldt, Mtg, Head	1
	25	1210112	(10000000- 20000000)	Washer, Flat, 1.03b 1.50d .03, Nylon	2
	26	222460	(10778394- 20000000)	Sleeve, P/M, 0.32b 0.50d 0.5l [430ss]	2
	27	1028796	(10778394- 20000000)	Washer, Flat, 0.33b 1.00d .18, Stl, Pl	1
	28	49694	(10000000- 10778393)	Screw, Hex, M8 X 1.25 X 50, Ss	1
	29	1214039	(10000000- 10778393)	Roller, Lift, Head	1

∇ ASSEMBLY

▲ INCLUDED IN ASSEMBLY

SCRUB HEAD LIFT GROUP, 50CM ORBITAL MODEL

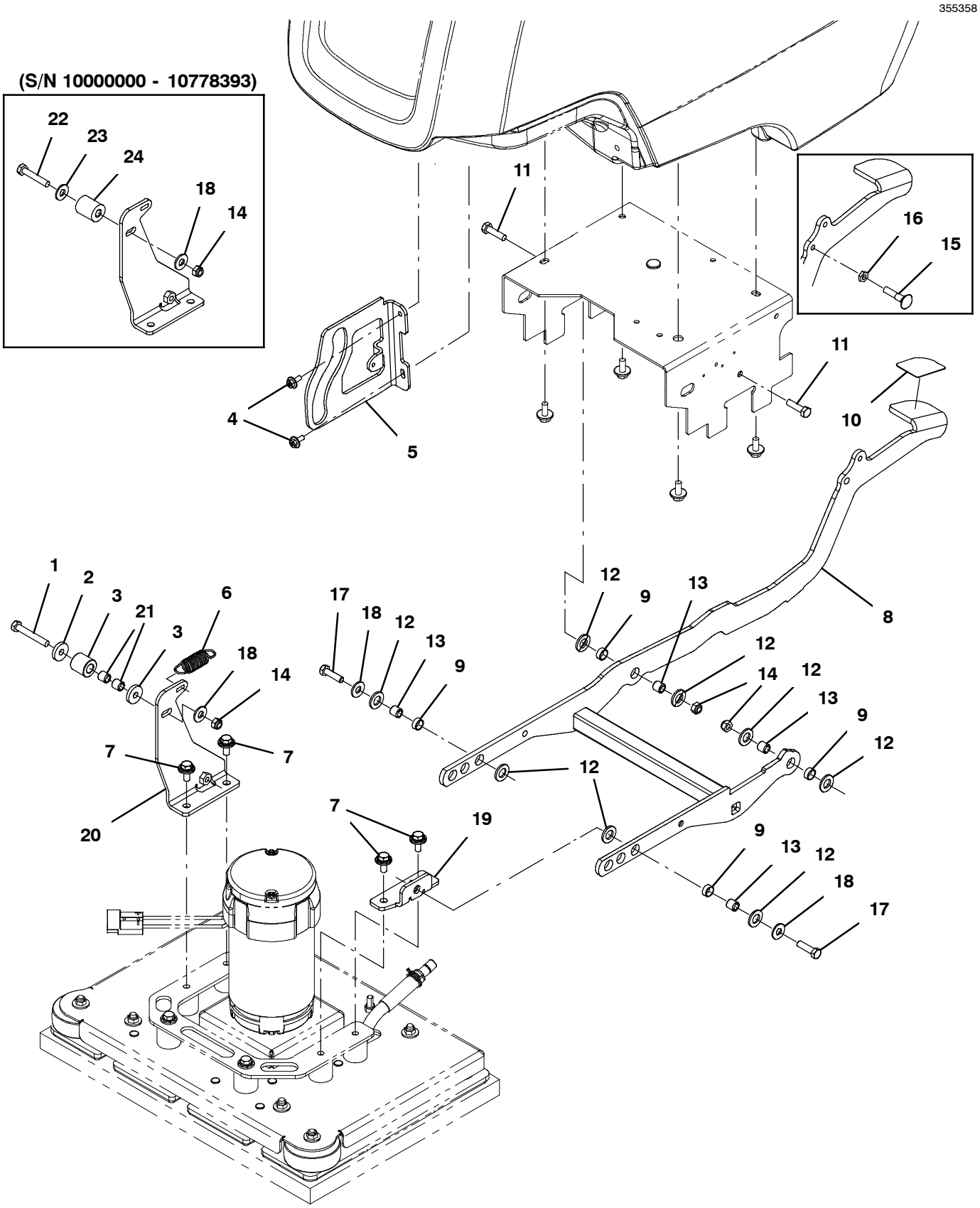

SCRUB HEAD LIFT GROUP, 50CM ORBITAL MODEL

	Ref.	Part No.	Serial Number	Description	Qty.
	1	222504	(10778394- 20000000)	Screw, Hex, M8 X 1.25 X 55, Ss	1
	2	1028796	(10778394- 20000000)	Washer, Flat, 0.33b 1.00d .18, Stl, Pl	2
	3	1014020	(10778394- 20000000)	Roller, 0.99d 0.50b 0.95l, Acetal	1
	4	1034731	(10000000- 20000000)	Screw, Hex, M6 X 1.00 X 16, Sems, Ss	2
	5	1213063	(10000000- 20000000)	Bracket, Guide, Head [Vw]	1
	6	1032420	(10000000- 20000000)	Spring, Extn, 0.85od 0.09wir 02.9l	1
	7	1020341	(10000000- 20000000)	Screw, Hex, M8 X 1.25 X 20, Ss, Sems	4
∇	8	9016811	(10887017- 20000000)	Kit, Lift, Head, Ci [T300/T300e/Ss300]	1
▲	9	630188	(10000000- 20000000)	Bearing, Journal, .50id X .25l	8
∇	8	9014170	(10000000- 10887016)	Kit, Lift, Head[T300/T300e/Ss300] (Replaced by 9016811)	1
▲	9	630188	(10000000- 20000000)	Bearing, Journal, .50id X .25l	8
	10	1218694	(10000000- 20000000)	Pad, Pedal, Lift	1
	11	09011	(10000000- 20000000)	Screw, Hex, M8 X 1.25 X 30, Ss	2
	12	1013936	(10000000- 20000000)	Washer, Flat, 0.51b 0.94d .10, Nyl	8
	13	222460	(10000000- 20000000)	Sleeve, P/M, 0.32b 0.50d 0.5l [430ss]	4
	14	08713	(10000000- 20000000)	Nut, Hex, Lock, M8 X 1.25, Nl, Ss	3
	15	1235108	(10000000- JAN2020)	Bolt, Carriage, M8 X 1.25 X 90, Fl	1
	16	200101017	(10000000- JAN2020)	Nut, Hex, Jam, M8 X 1.25	1
	17	1016399	(10000000- 20000000)	Screw, Hex, M8 X 1.25 X 30, Nl, Ss	2
	18	01685	(10000000- 20000000)	Washer, Flat, 0.38b 0.88d .08, Ss	3
	19	1212572	(10000000- 20000000)	Bracket Wldt, Mtg, Head, Orb, Short [Vw]	1
	20	1213223	(10000000- 20000000)	Bracket Wldt, Mtg, Head, Orb, Tall [Vw]	1
	21	222460	(10778394- 20000000)	Sleeve, P/M, 0.32b 0.50d 0.5l [430ss]	2
	22	49694	(10000000- 10778393)	Screw, Hex, M8 X 1.25 X 50, Ss	1
	23	01685	(10000000- 10778393)	Washer, Flat, 0.38b 0.88d .08, Ss	1
	24	1214039	(10000000- 10778393)	Roller, Lift, Head	1

∇ ASSEMBLY

▲ INCLUDED IN ASSEMBLY

SQUEEGEE ASSEMBLY, 500MM / 20IN

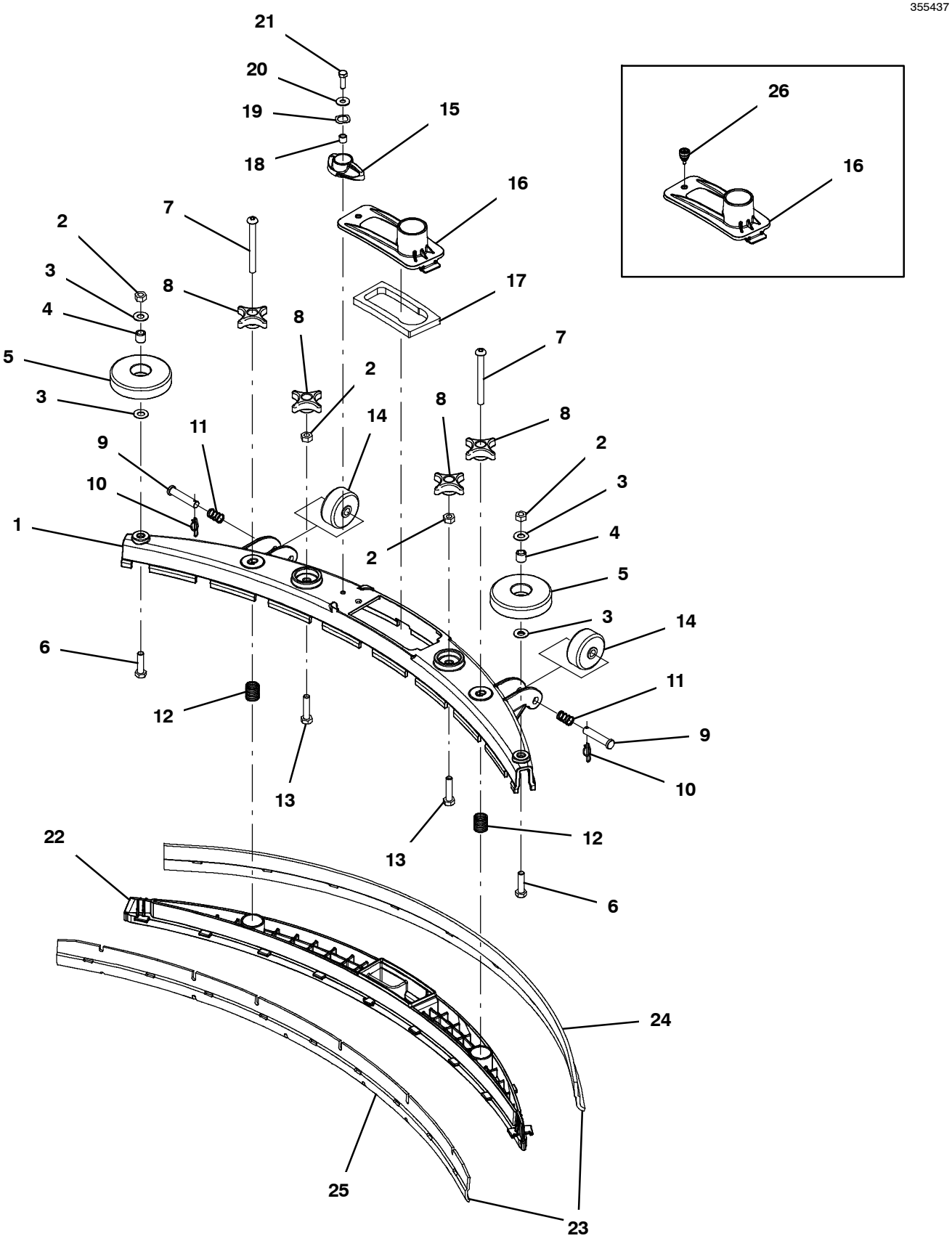

SQUEEGEE ASSEMBLY, 500MM / 20IN

	Ref.	Part No.	Serial Number	Description	Qty.
∇		9014172	(10000000- 20000000)	Squeegee Kit, Linatex, Ci [T300/E/Ss300]	1
▲	1	1230946	(10000000- 20000000)	Frame, Sqge, 50cm, Mach [T300]	1
▲	2	07786	(10000000- 20000000)	Nut, Hex, Std, M8 X 1.25, Ss	2
▲	3	140027	(10000000- 20000000)	Washer, Flat, 0.35b 0.75d .04, Ss	4
▲	4	222460	(10000000- 20000000)	Sleeve, P/M, 0.32b 0.50d 0.5l [430ss]	2
▲	5	1010560	(10000000- 20000000)	Wheel, Bmpr, 80d X 25w, Non- Marking	2
▲	6	1016399	(10000000- 20000000)	Screw, Hex, M8 X 1.25 X 30, Nl, Ss	2
▲	7	1212755	(10000000- 20000000)	Screw, Btn, M8 X 1.25 X 80, Ss	2
▲	8	1213677	(10000000- 20000000)	Knob, Star, 2.00od 4ear M8x1.25 [Yel]	4
▲	9	17461	(10000000- 20000000)	Pin, Clevis, 0.37d X 1.75l	2
▲	10	1216647	(10000000- 20000000)	Pin, Cotter, Hair, 0.38d .054 Wir	2
▲	11	1017091	(10000000- 20000000)	Spring, Cmpr, 0.50od .04wir 00.8l	2
▲	12	22290	(10000000- 20000000)	Spring, Cmpr, 0.72od .06wir 02.3l	2
▲	13	09026	(10000000- 20000000)	Screw, Hex, M8 X 1.25 X 40, Ss	2
▲	14	630477	(10000000- 20000000)	Wheel, Pyu, 02.0d 0.38w, Gray	2
▲	15	1222109	(xxxxxxxx- 20000000)	Knob, Sqge, 58l, M6 X 1.00, Plstc	1
▲	16	1209631	(10000000- 20000000)	Cover, Trap, Water, Sqge	1
▲	17	1210756	(10000000- 20000000)	Gasket, Trap, Water, Sqge	1
▲	18	140154	(xxxxxxxx- 20000000)	Sleeve, P/M, 0.25b 0.38d 0.3l, Pl	1
▲	19	140060	(xxxxxxxx- 20000000)	Washer, .505 X .750 X 0.45 Wave	1
▲	20	01684	(xxxxxxxx- 20000000)	Washer, Flat, 0.27b 0.69d .05, Ss	1
▲	21	12277	(xxxxxxxx- 20000000)	Screw, Hex, M6 X 1.00 X 20, Nl, Ss	1
▲	22	1203638	(10000000- 20000000)	Retainer, Sqge [T300]	1
▲∇	23	9015731	(10000000- 20000000)	Blade Kit, 500mm, Linatex (Standard)	1
▲▲	24	1203953	(10000000- 20000000)	Blade, Sqge, Rear, 836l, Linatex[500mm] (Standard)	1
▲▲	25	1203954	(10000000- 20000000)	Blade, Sqge, Front, 788l, Linatex[500mm] (Standard)	1
∇	23	9015732	(10000000- 20000000)	Blade Kit, 500mm, Urethane (Option)	1
▲	24	1215609	(10000000- 20000000)	Blade, Sqge, Rear, 836l, Urethane[500mm] (Option)	1
▲	25	1215611	(10000000- 20000000)	Blade, Sqge, Front, 788l, Urethane[500mm (Option)	1
∇	23	9015730	(10000000- 20000000)	Blade Kit, 500mm, Gum (Option)	1
▲	24	1215610	(10000000- 20000000)	Blade, Sqge, Rear, 836l, Gum[500mm] (Option)	1
▲	25	1215612	(10000000- 20000000)	Blade, Sqge, Front, 788l, Gum[500mm] (Option)	1
	26	1212683	(10000000- xxxxxxxx)	Screw, Captive, M5, Knurled [Snap In]	1

∇ ASSEMBLY

▲ INCLUDED IN ASSEMBLY

SQUEEGEE LIFT GROUP

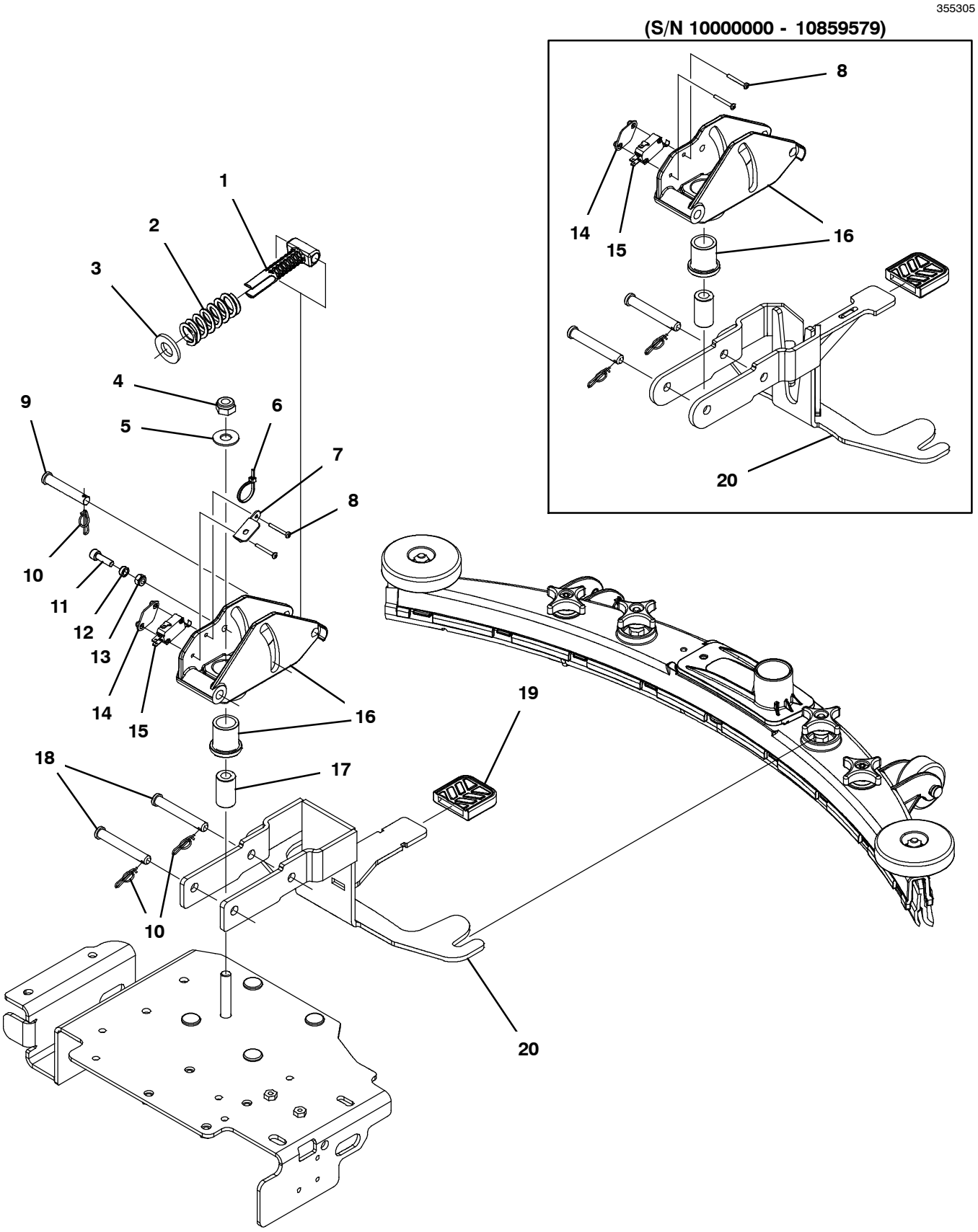

SQUEEGEE LIFT GROUP

Ref.	Part No.	Serial Number	Description	Qty.
1	1230485	(10000000- 20000000)	Pin, Guide, Spring [T300]	1
2	1215756	(10000000- 20000000)	Spring, Cmpr, 0.98od .146wir 02.5l	1
3	69954	(10000000- 20000000)	Washer, Thrust, 0.63b 1.25d 0.13w	1
4	08714	(10000000- 20000000)	Nut, Hex, Lock, M10 X 1.5, Nl, Ss	1
5	140045	(10000000- 20000000)	Washer, Flat, 0.51b 1.25d .06, Ss	1
6	130773	(10859580- 20000000)	Tie, Cable, Nyl, 11.0l, .14w, 3.0 Max. D	1
7	1233709	(10859580- 20000000)	Bracket, Retaining, Wire [T300]	1
8	33933	(10000000- 20000000)	Screw, Pan, Phl, M3 X 0.50 X 25, Ss	2
9	51813	(10000000- 20000000)	Pin, Clevis, 0.37d X 2.12l	1
10	1216647	(10000000- 20000000)	Pin, Cotter, Hair, 0.38d .054 Wir	3
11	33951	(10000000- 20000000)	Screw, Soc, M6 X 1.00 X 20, 12.9	1
12	80491	(10000000- 20000000)	Sleeve, P/M, 0.25b 0.38d 0.2l [430ss]	1
13	08712	(10000000- 20000000)	Nut, Hex, Lock, M6 X 1.00, Nl, Ss	1
14	1013705	(10000000- 20000000)	Plate, Thread, Switch, M3 Nut, 96hr Pl	1
15	1215716	(10000000- 20000000)	Switch, 0.1a, Spdt[Micro, Gold Contacts]	1
16	9014301	(10000000- 20000000)	Bracket Kit, Sqge, Lift [T300/E, Ss300]	1
17	1214467	(10000000- 20000000)	Sleeve, P/M, 0.41b 0.75d 1.3l [430ss]	1
18	391179	(10000000- 20000000)	Pin, Clevis, 0.37d X 2.62l	2
19	1212533	(10000000- 20000000)	Cover, Pedal, Lift	1
20	9014303	(10000000- 20000000)	Bracket Kit, Sqge, Wdt [T300/E, Ss300]	1

BATTERY CABLE GROUP

355403

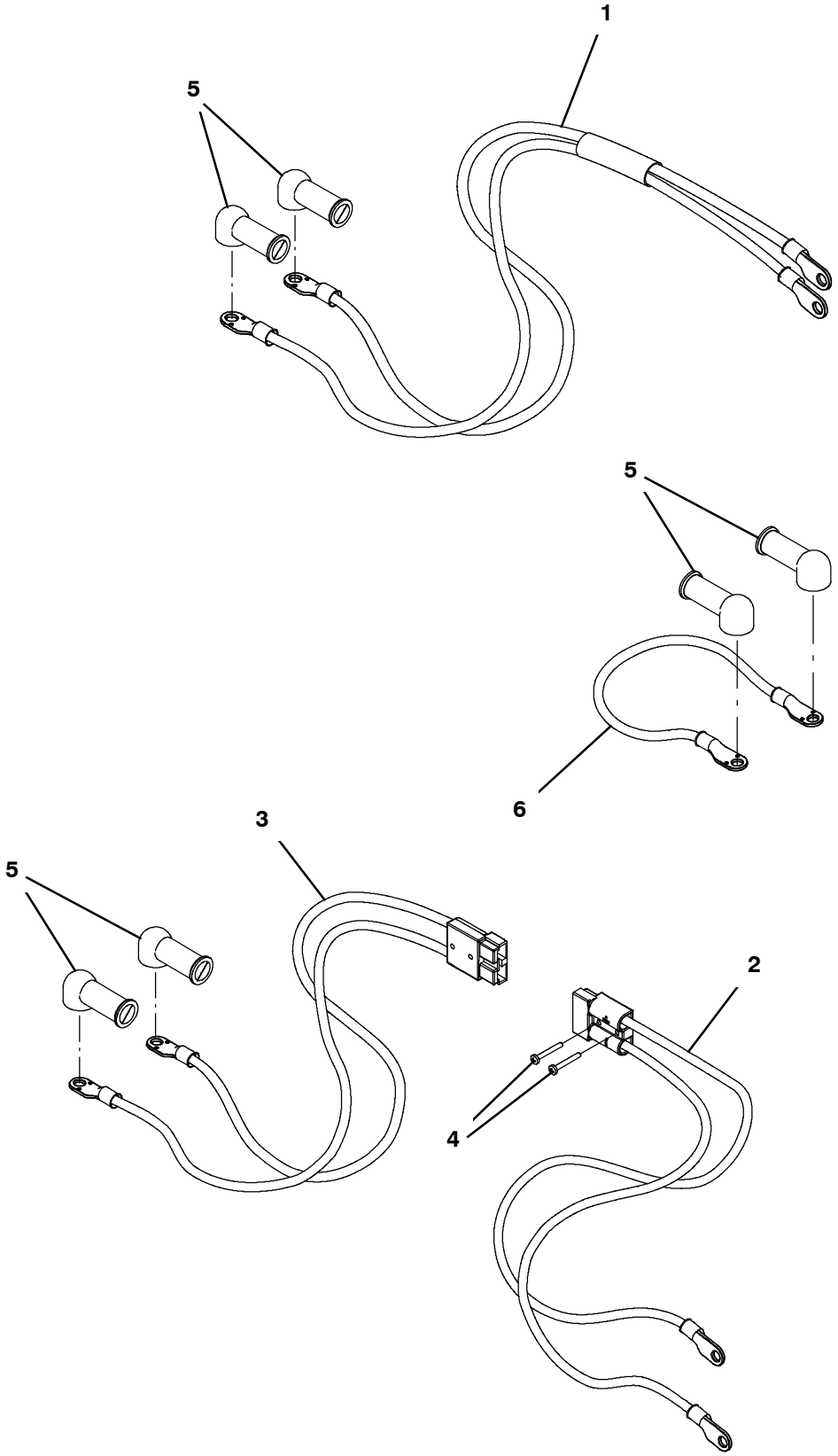

BATTERY CABLE GROUP

	Ref.	Part No.	Serial Number	Description	Qty.
	1	1074847	(10790532- 20000000)	Cable, Assy [T300e] (Standard - Without Battery Lift Out Kit Option)	1
∇		9014781	(10000000- 20000000)	Cable Kit, Battery, Ring, Tray,Ci[T300e] (Required for Battery Lift Out Kit Option)	1
▲	2	1073629	(10000000- 10790531)	Cable, Battery, 4ga [M8 Ring/M8 Ring]	1
▲	3	1073628	(10000000- 10790531)	Cable, Battery, 4ga [M8 Ring/M8 Ring]	1
▲	4	33931	(10000000- 10790531)	Screw, Pan, Phl, M4 X 0.70 X 30, Ss	2
	5	611221	(10790532- 20000000)	Boot, Terminal, Battery, 25.4mm, Blk	2
	5	611221	(10000000- 10790531)	Boot, Terminal, Battery, 25.4mm, Blk	4
	6	1073680	(10000000- 20000000)	Cable, 04ga 15.0l Blk [M8 Ring/M8 Ring]	1

∇ ASSEMBLY

▲ INCLUDED IN ASSEMBLY

BATTERY GROUP, 105AH C20 WET

355359

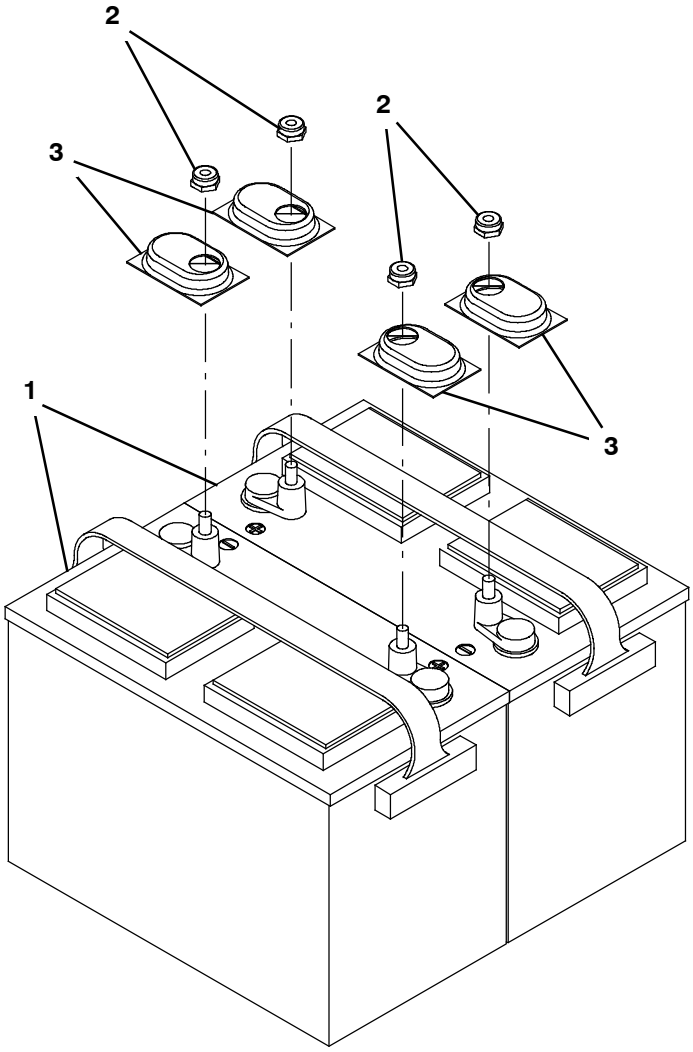

Ref.	Part No.	Serial Number	Description	Qty.
1	578426	(10000000- 20000000)	Battery, Wet, 12vdc 0105ah [S8, 27tmx]	2
2	87435	(10000000- 20000000)	Nut, Hex, Flexlock, .31- 18	4
3	45962	(10000000- 20000000)	Cap, Battery, White [For 105ah & 130ah]	4

BATTERY GROUP, 130AH C20 WET

355360

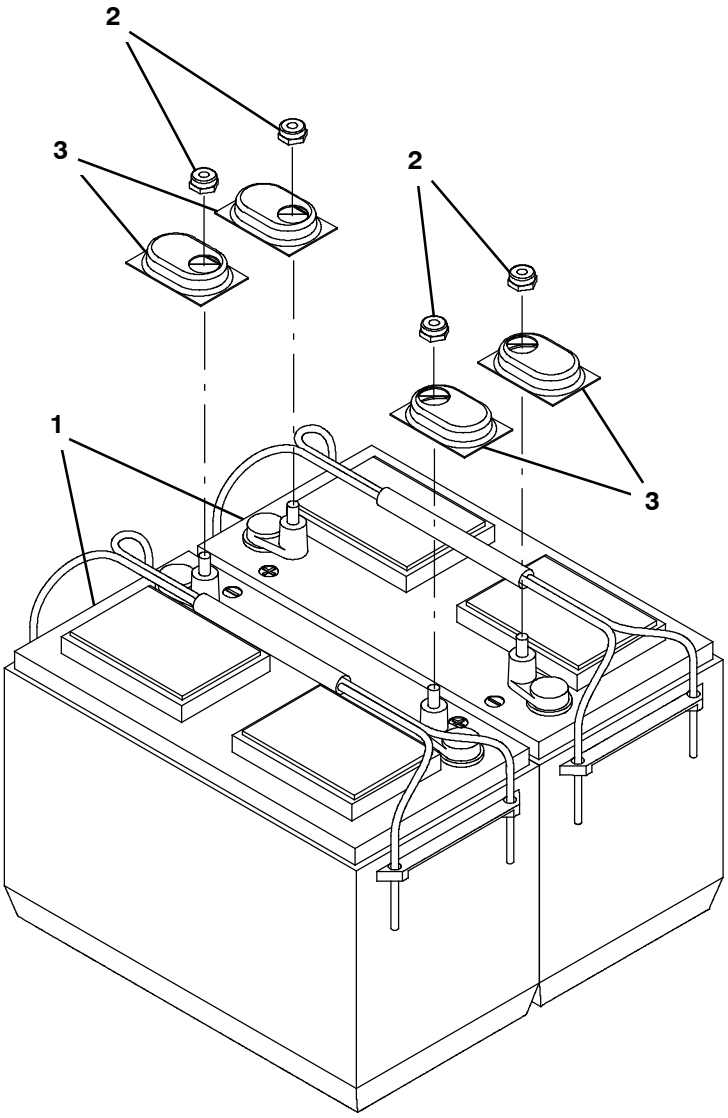

Ref.	Part No.	Serial Number	Description	Qty.
1	130869	(10000000- 20000000)	Battery, Wet, 12vdc 0130ah [30xhs- Wnt]	2
2	87435	(10000000- 20000000)	Nut, Hex, Flexlock, .31- 18	4
3	45962	(10000000- 20000000)	Cap, Battery, White [For 105ah & 130ah]	4

BATTERY GROUP, 150AH C20 WET

355361

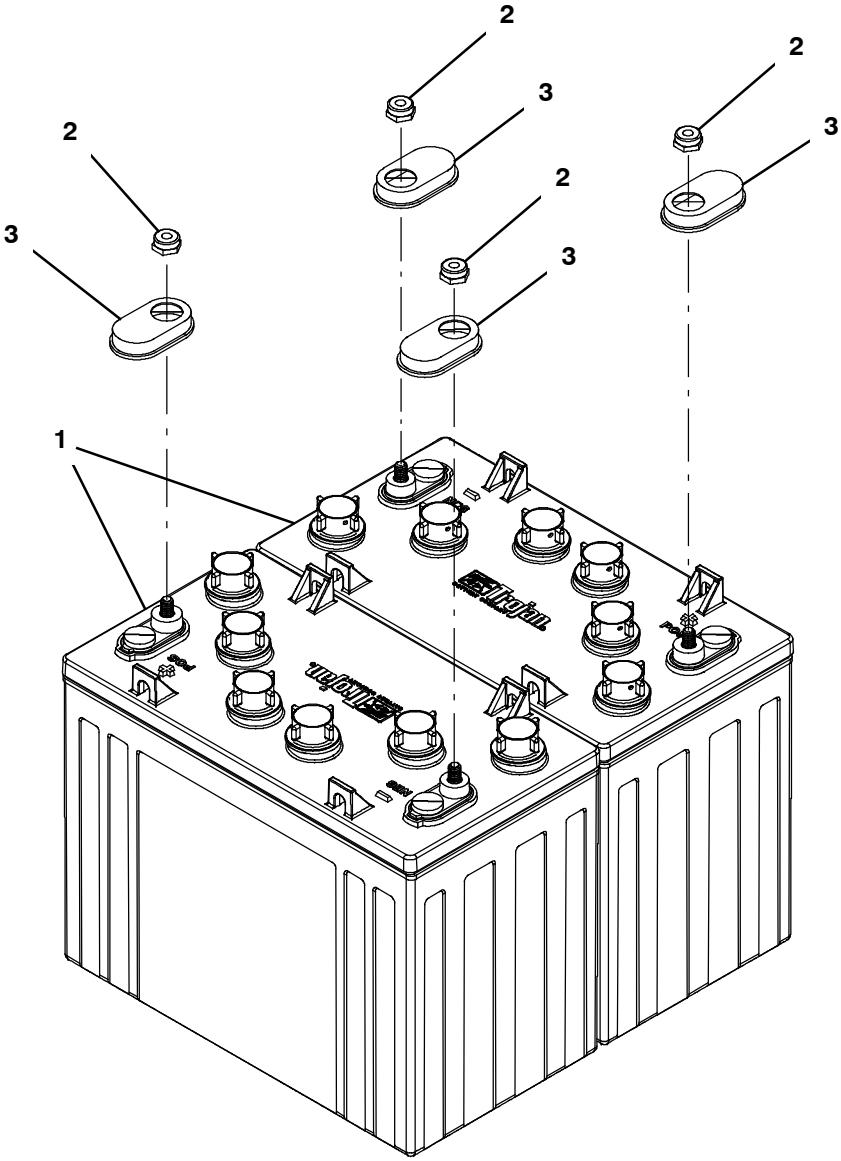

Ref.	Part No.	Serial Number	Description	Qty.
1	1015046	(10000000- 20000000)	Battery, Wet, 12vdc 0150ah	2
2	87435	(10000000- 20000000)	Nut, Hex, Flexlock, .31- 18	4
3	1041030	(10000000- 20000000)	Cap, Battery, Black [For 155ah]	4

BATTERY GROUP, 140AH C20 AGM

355362

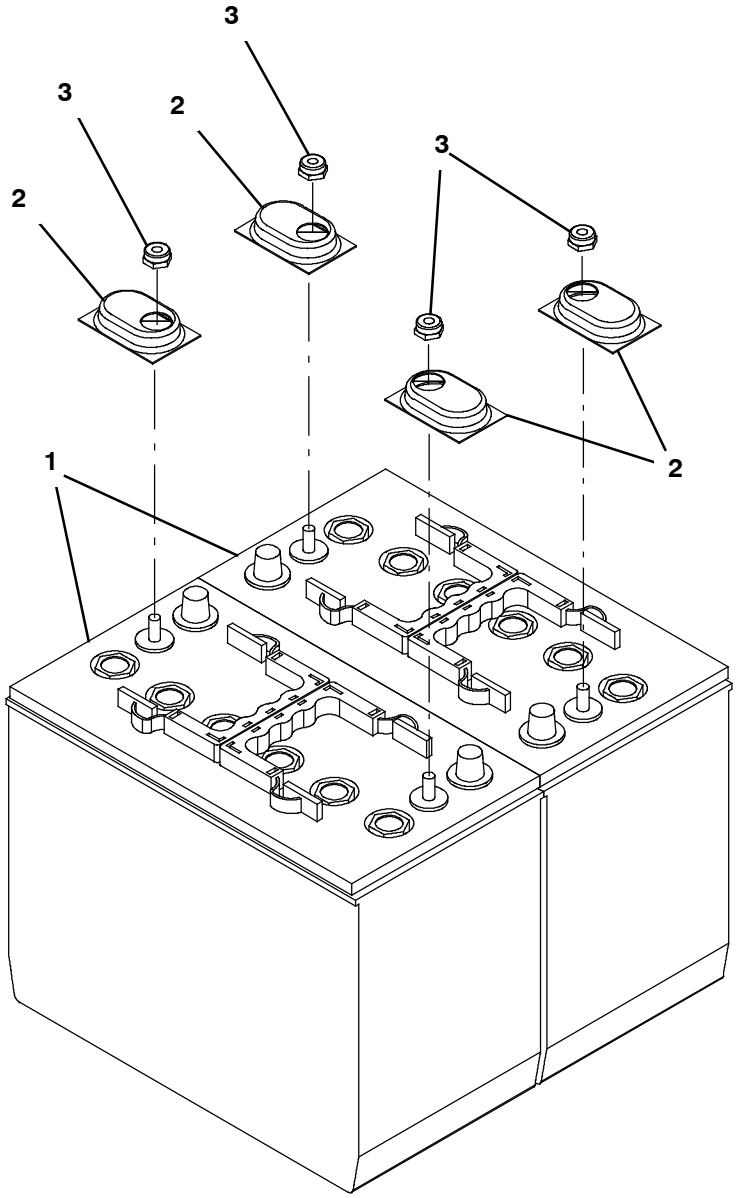

Ref.	Part No.	Serial Number	Description	Qty.
1	1053408	(10000000- 20000000)	Battery, 12vdc 0140ah [Agm]	2
2	45962	(10000000- 20000000)	Cap, Battery, White [For 105ah & 130ah]	4
3	87435	(10000000- 20000000)	Nut, Hex, Flexlock, .31- 18	4

LABEL GROUP

355365

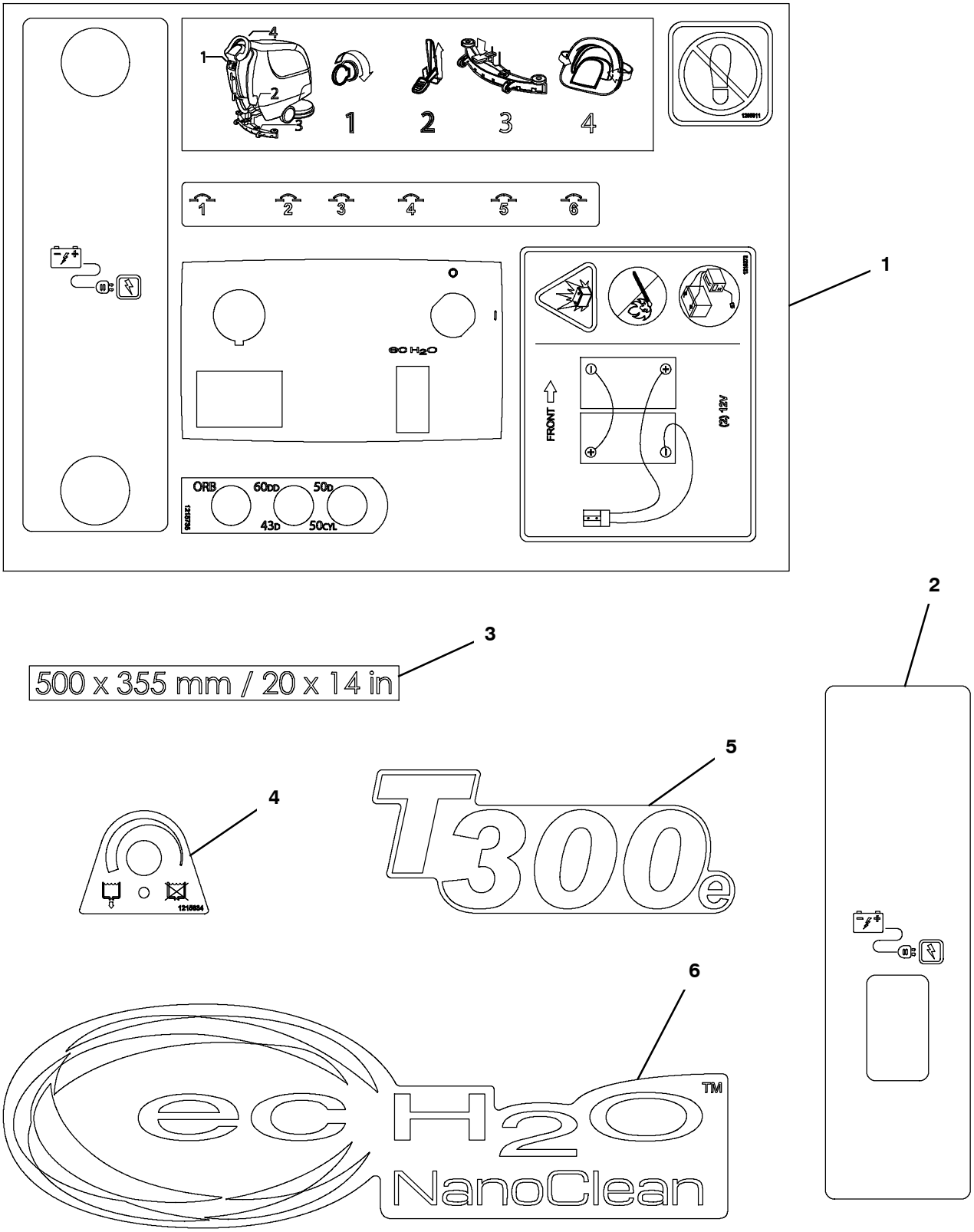

LABEL GROUP

Ref.	Part No.	Serial Number	Description	Qty.
1	1236088	(10000000- 20000000)	Label Sheet, Operational [T300/Ss300]	1
2	1225763	(10000000- 20000000)	Label, Decal, Charger, Off- Board	1
3	1214279	(10000000- 20000000)	Label, Orbital, Size, 50cm (Orbital Head)	1
4	1215634	(10000000- 20000000)	Label, Opertnl, Solution Knob Adj	1
5	1215263	(10000000- 20000000)	Label, T300e	2
6	1216520	(10000000- 20000000)	Label, Logo [Ech2o Nano] (ec- H2O Model)	2

LABEL GROUP - CONT'D

355364

1

2

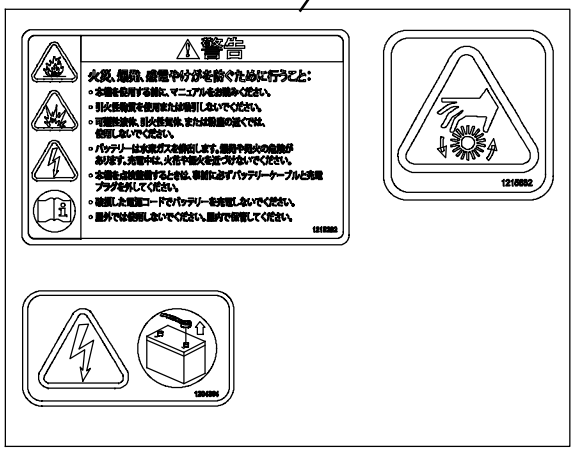

3

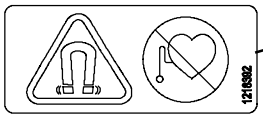

4

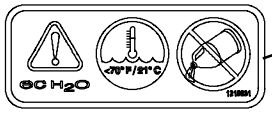

5

6

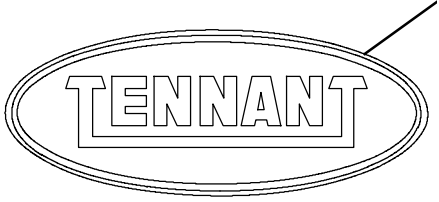

LABEL GROUP - CONT'D

Ref.	Part No.	Serial Number	Description	Qty.
1	1220962	(10000000- 20000000)	Label Sheet, Info/Hzrd [T500, Na]	1
2	1220966	(10000000- 20000000)	Label Sheet, Info/Hzrd [T500, Jp]	1
3	1218392	(10000000- 20000000)	Label, Safety, Magnet, Med (Magnetic Heads)	1
4	1050003	(10000000- 20000000)	Label [User, Attention, Ec- H2o] (Japan Only)	1
5	1224990	(10000000- 20000000)	Label, Opertnl, Parking Brake (Optional)	1
6	1213114	(10000000- 20000000)	Label, Logo, 05.5l, Blk/Sil [Tennant]	1

ELECTRICAL DIAGRAM, PROPEL (S/N 10891949 -) (PAGE 1 OF 3)

1074707_02

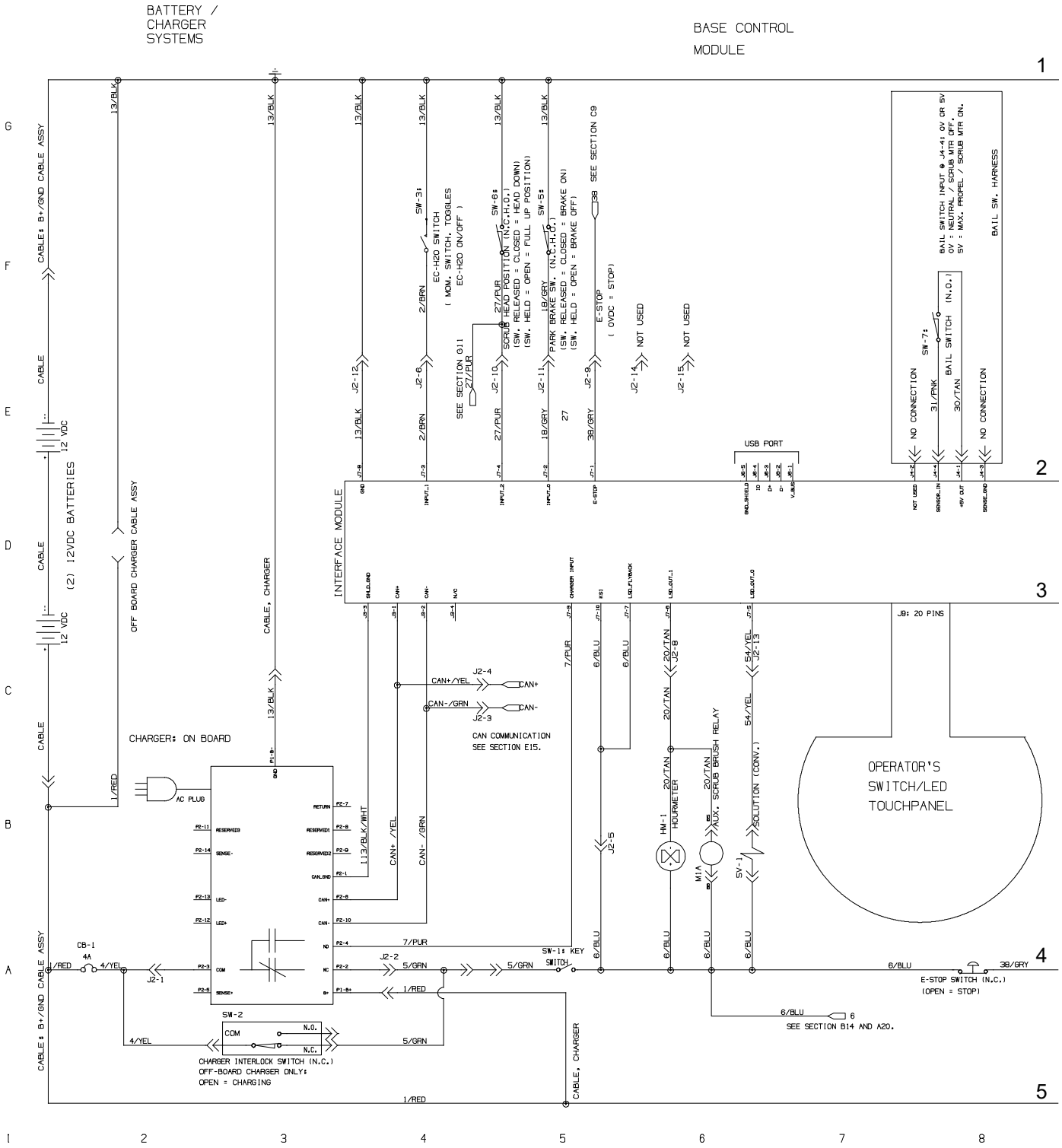

ELECTRICAL DIAGRAM, PROPEL (S/N 10891949 -) (PAGE 2 OF 3)

1074707_02

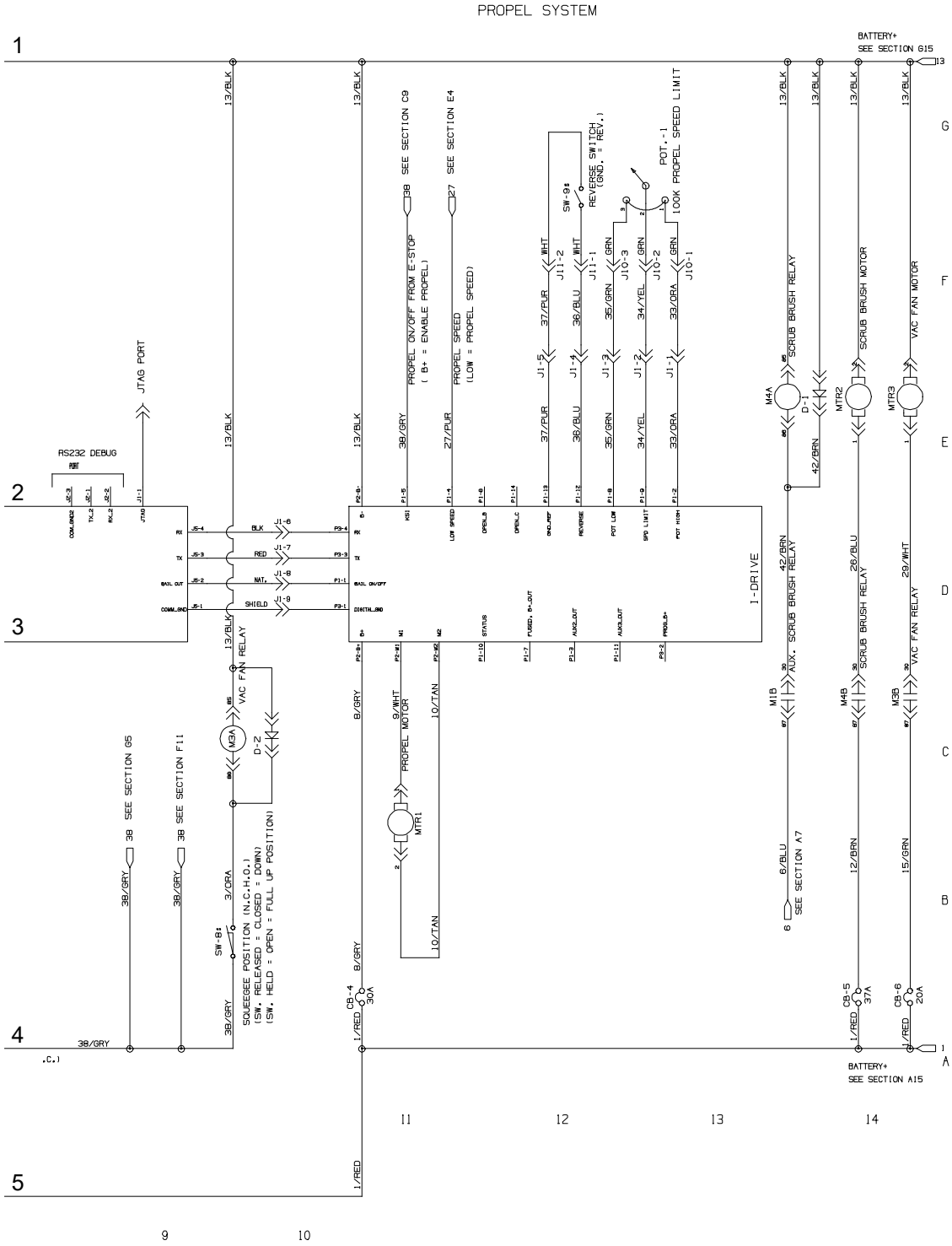

ELECTRICAL DIAGRAM, PROPEL (S/N 10891949 -) (PAGE 3 OF 3)

1074707_02

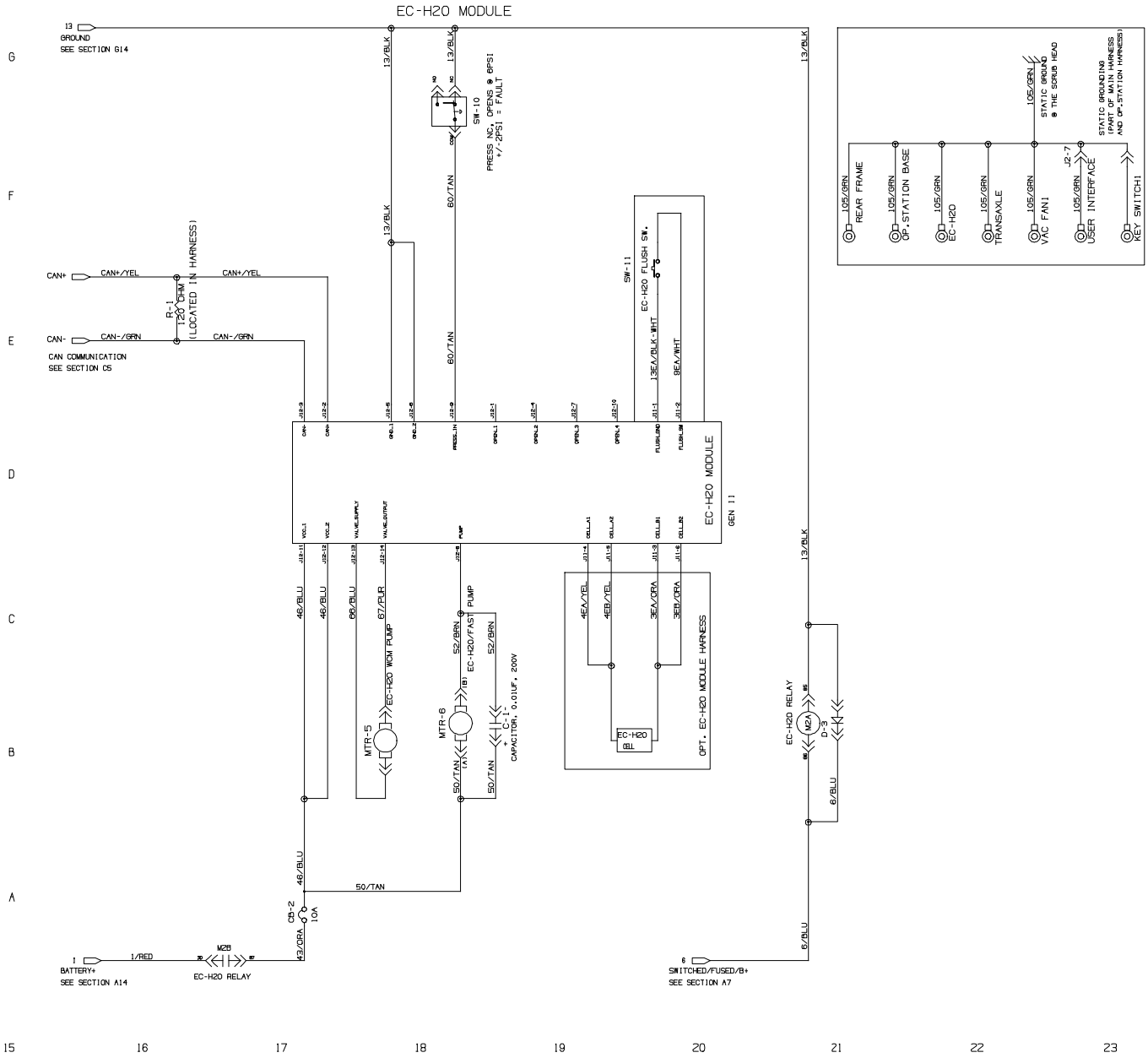

ELECTRICAL DIAGRAM, PROPEL (S/N 10000000 - 10891948) (PAGE 1 OF 3)

1074707_00

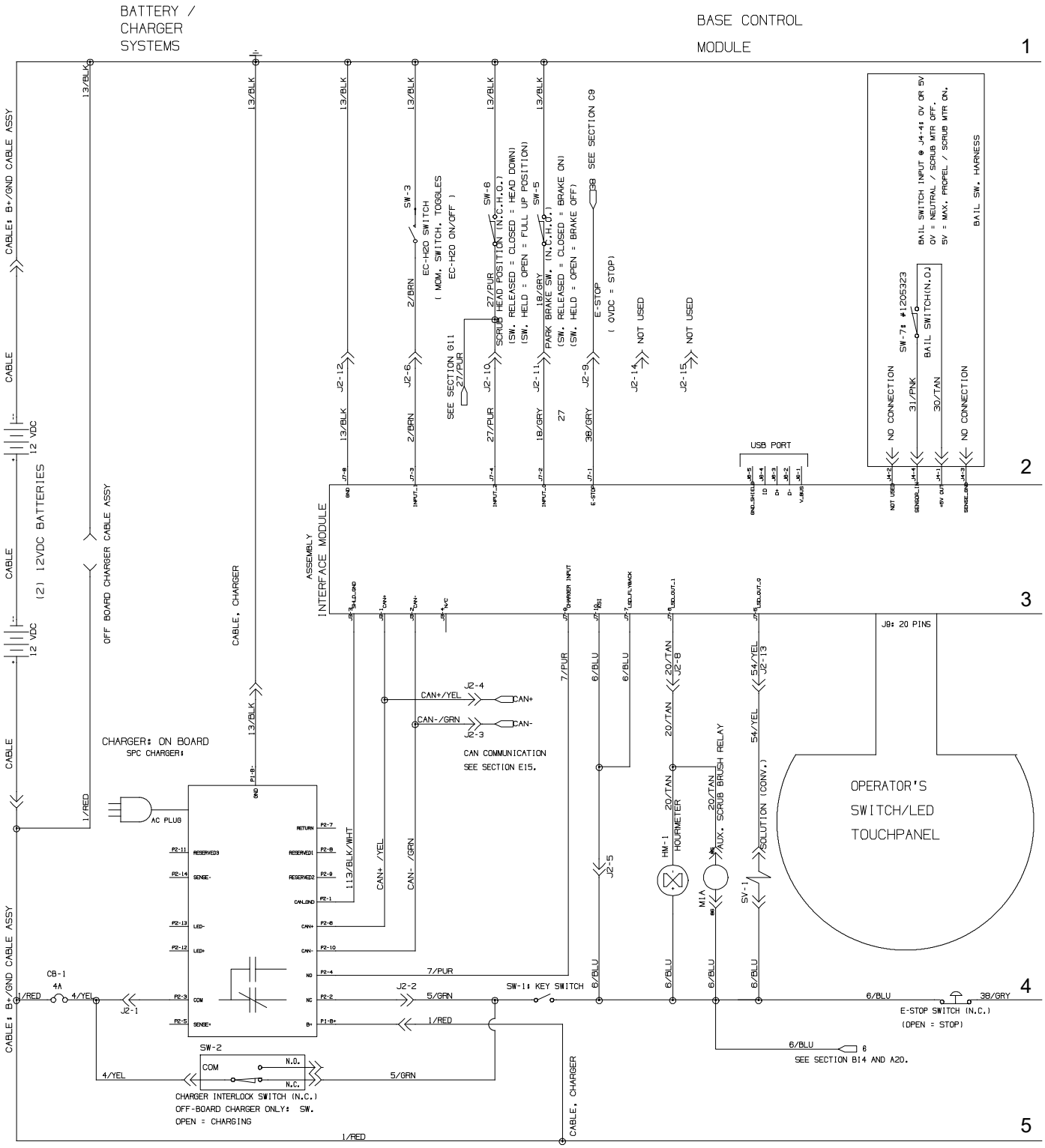

ELECTRICAL DIAGRAM, PROPEL (S/N 10000000 - 10891948) (PAGE 2 OF 3)

1074707_00

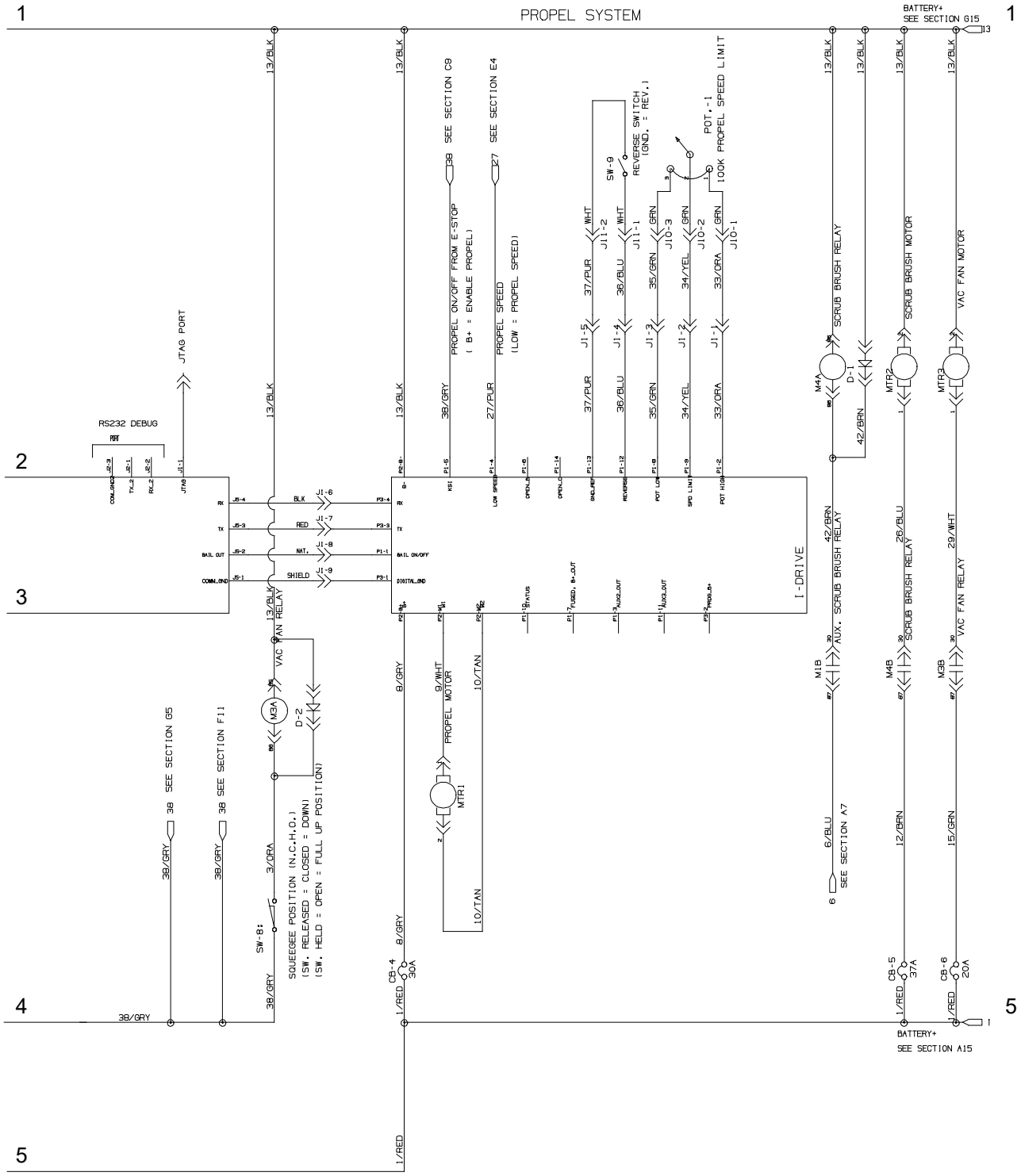

ELECTRICAL DIAGRAM, PROPEL (S/N 10000000 - 10891948) (PAGE 3 OF 3)

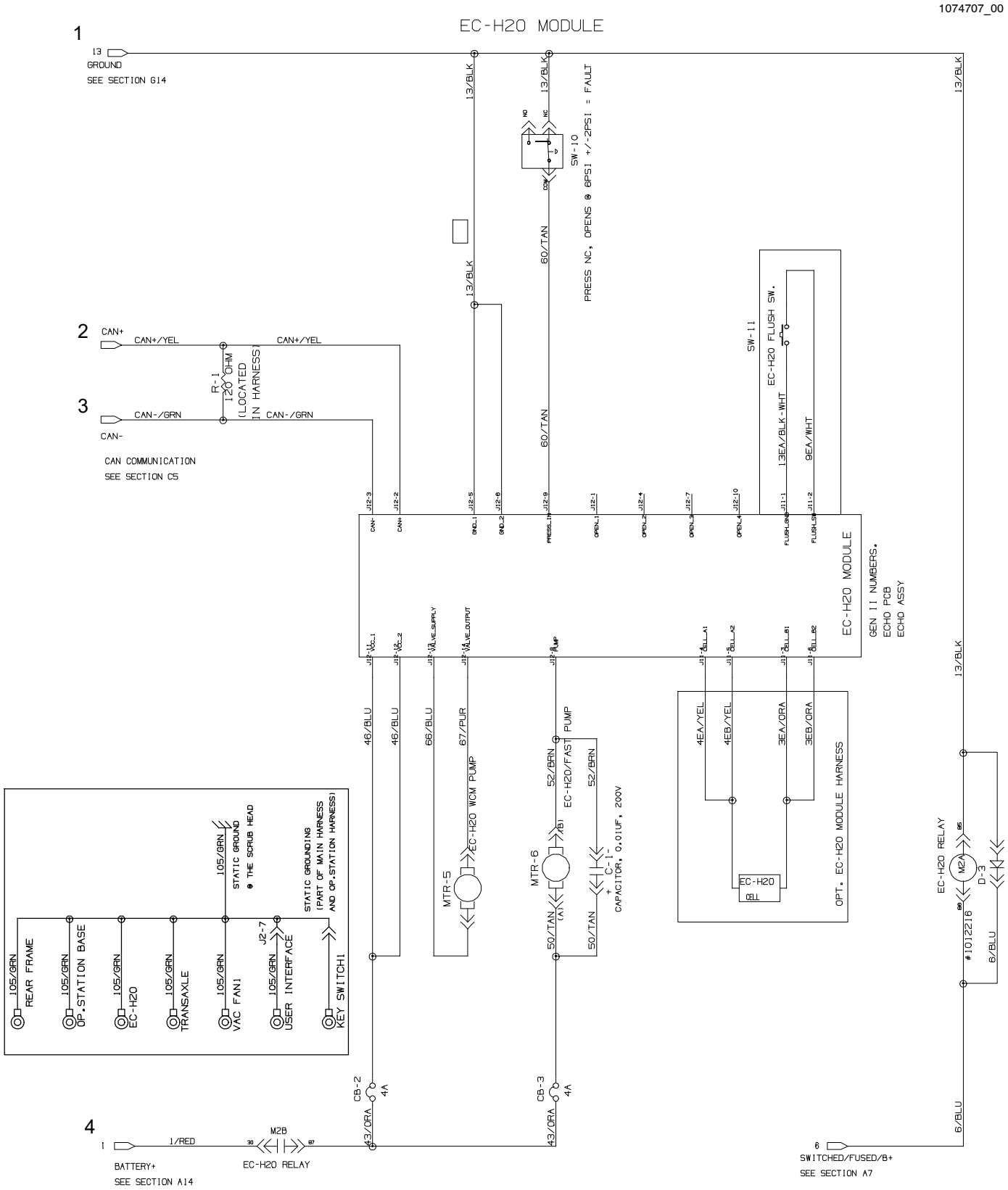

ELECTRICAL DIAGRAM, PUSH (S/N 10891710 -) (PAGE 1 OF 3)

1074708_02

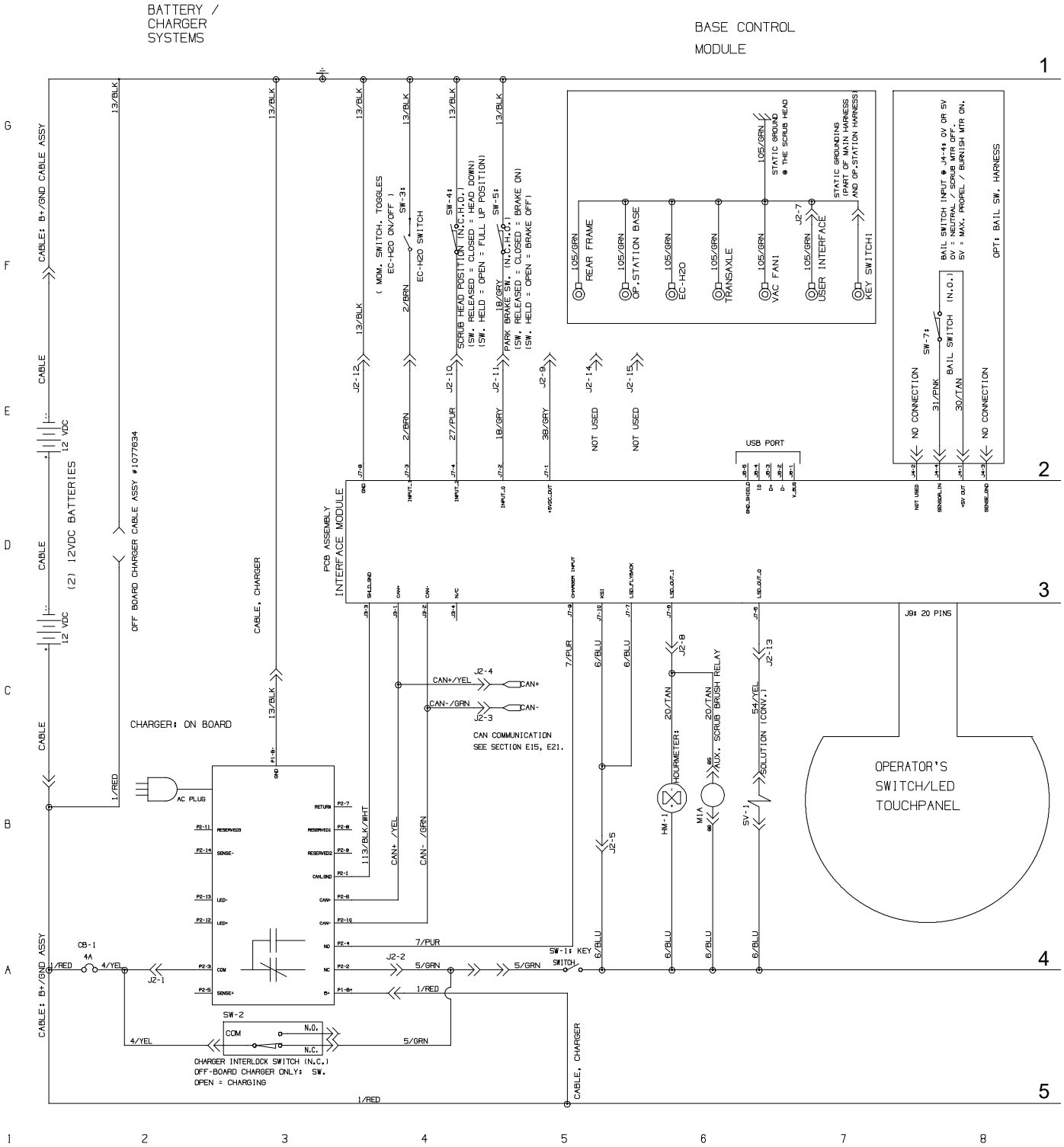

ELECTRICAL DIAGRAM, PUSH (S/N 10891710 -) (PAGE 2 OF 3)

1074708_02

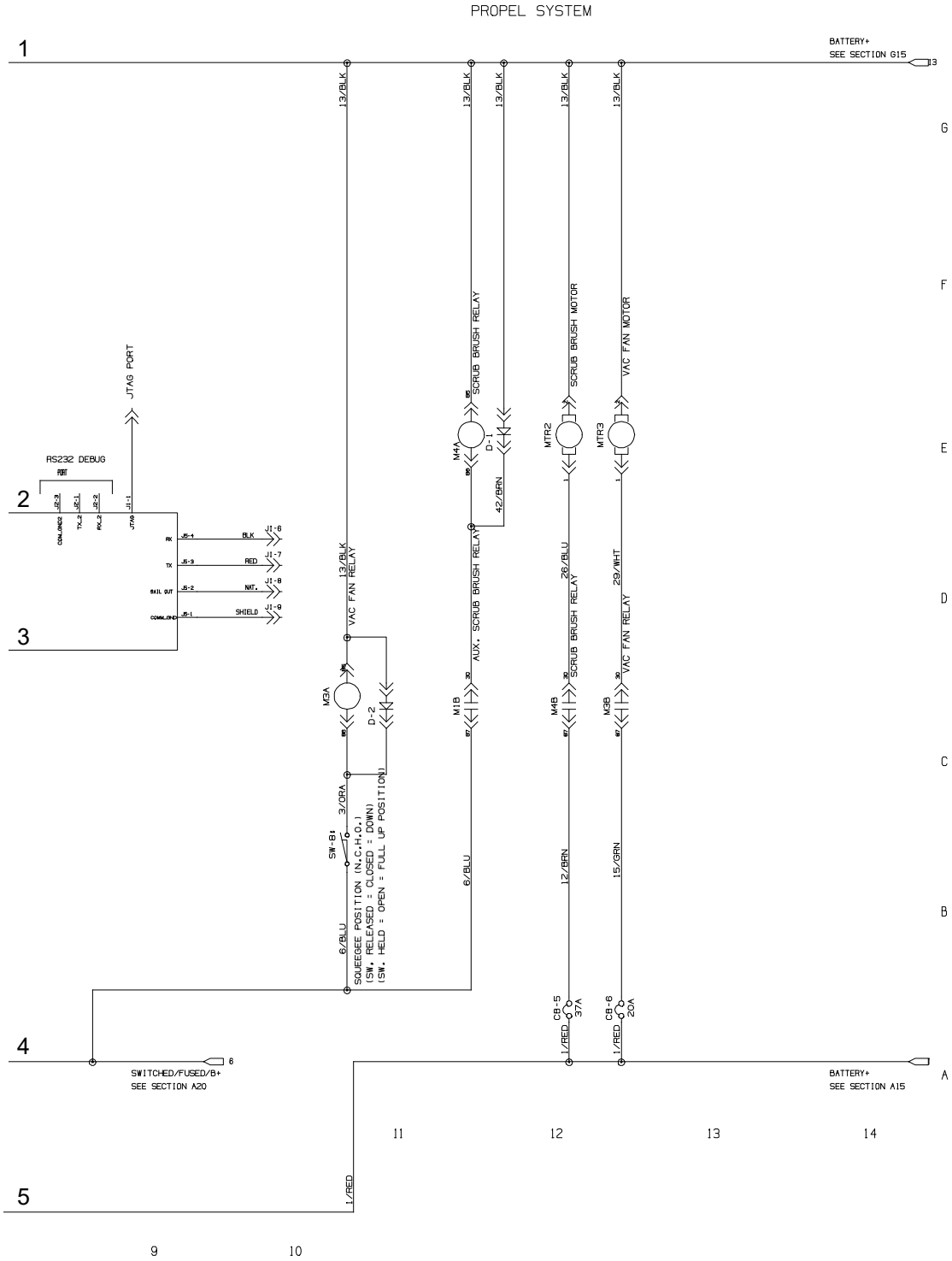

ELECTRICAL DIAGRAM, PUSH (S/N 10891710 -) (PAGE 3 OF 3)

1074708_02

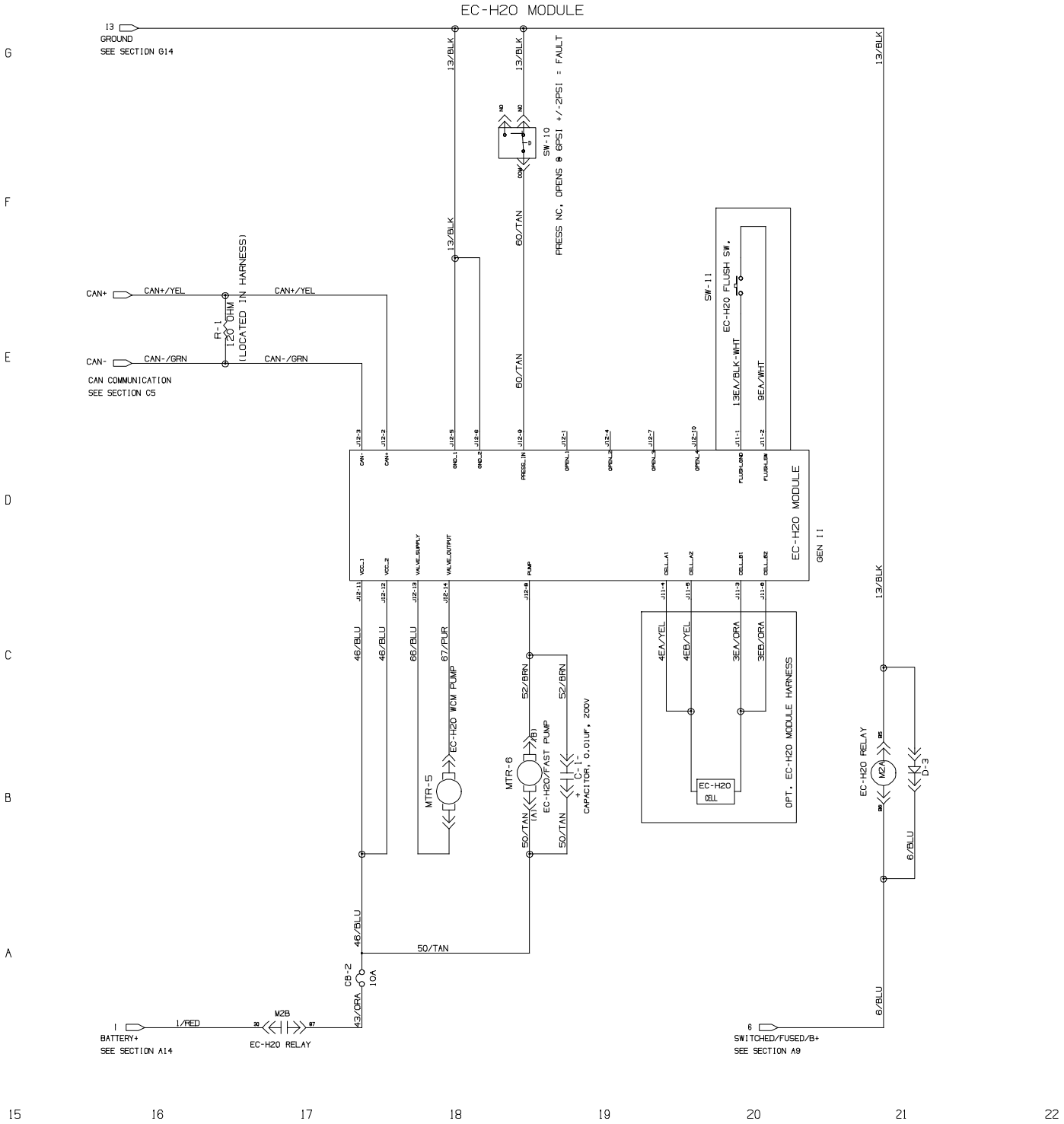

ELECTRICAL DIAGRAM, PUSH (S/N 10000000 - 10891709) (PAGE 1 OF 3)

1074708_00

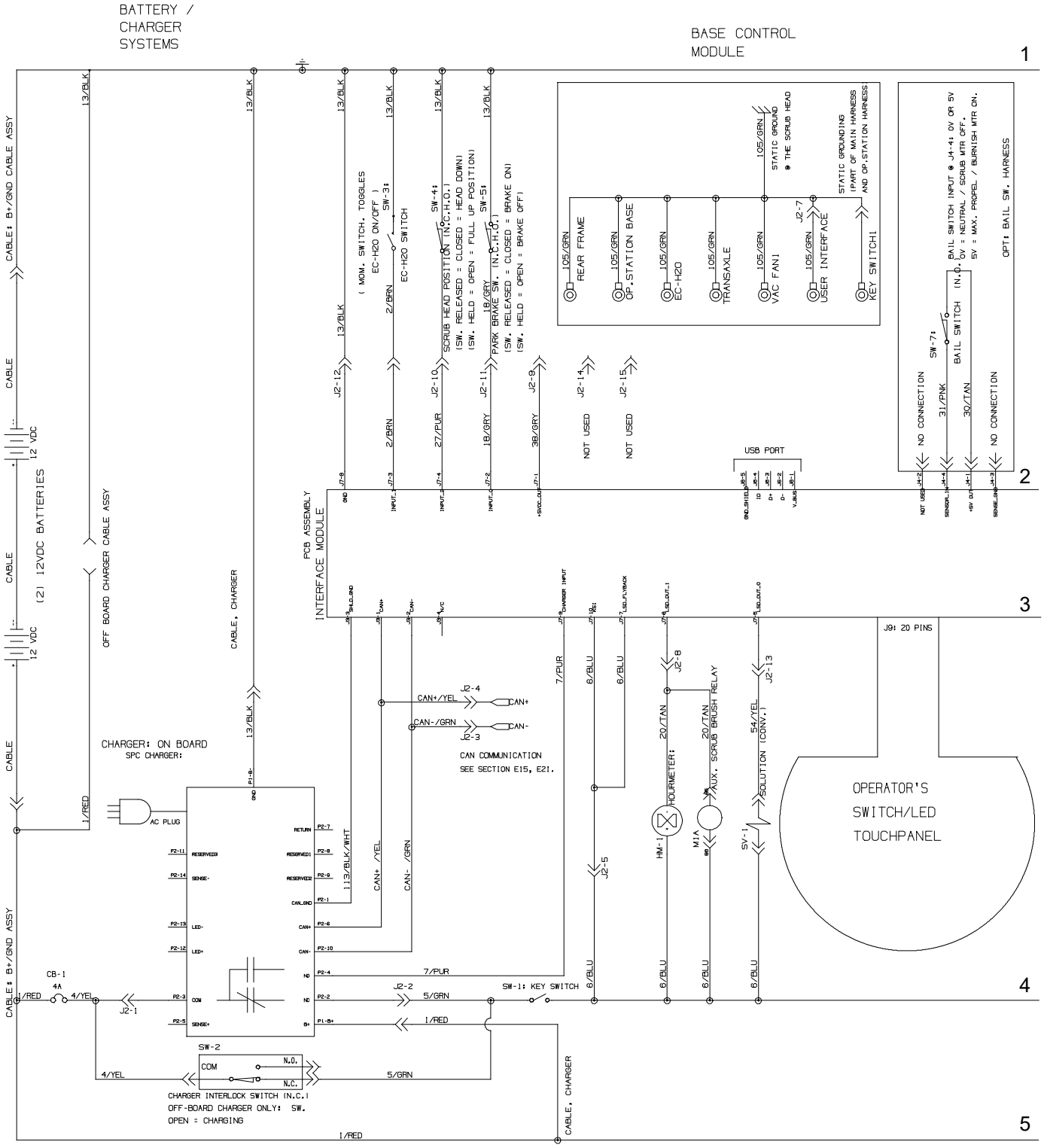

ELECTRICAL DIAGRAM, PUSH (S/N 10000000 - 10891709) (PAGE 2 OF 3)

1074708_00

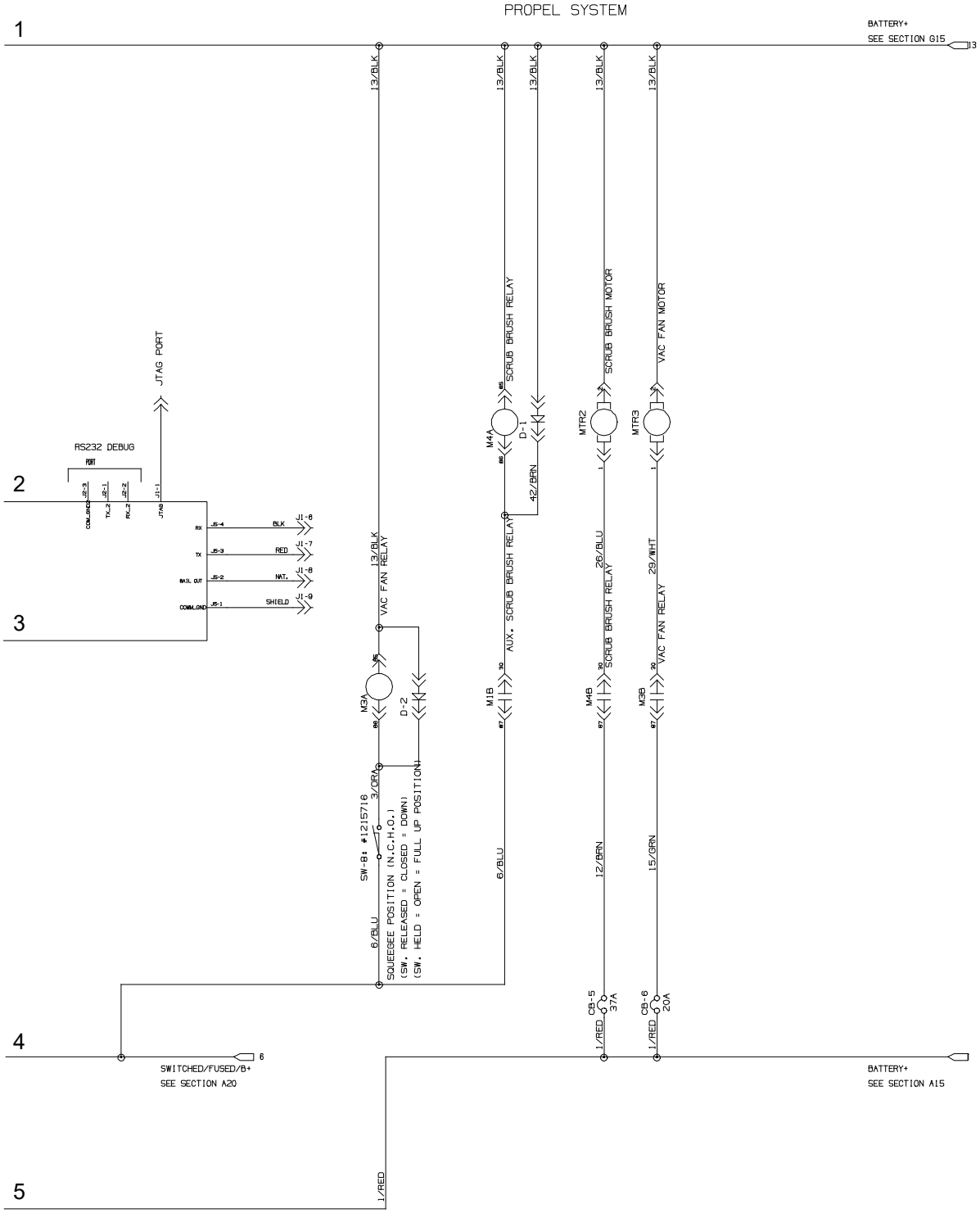

ELECTRICAL DIAGRAM, PUSH (S/N 10000000 - 10891709) (PAGE 3 OF 3)

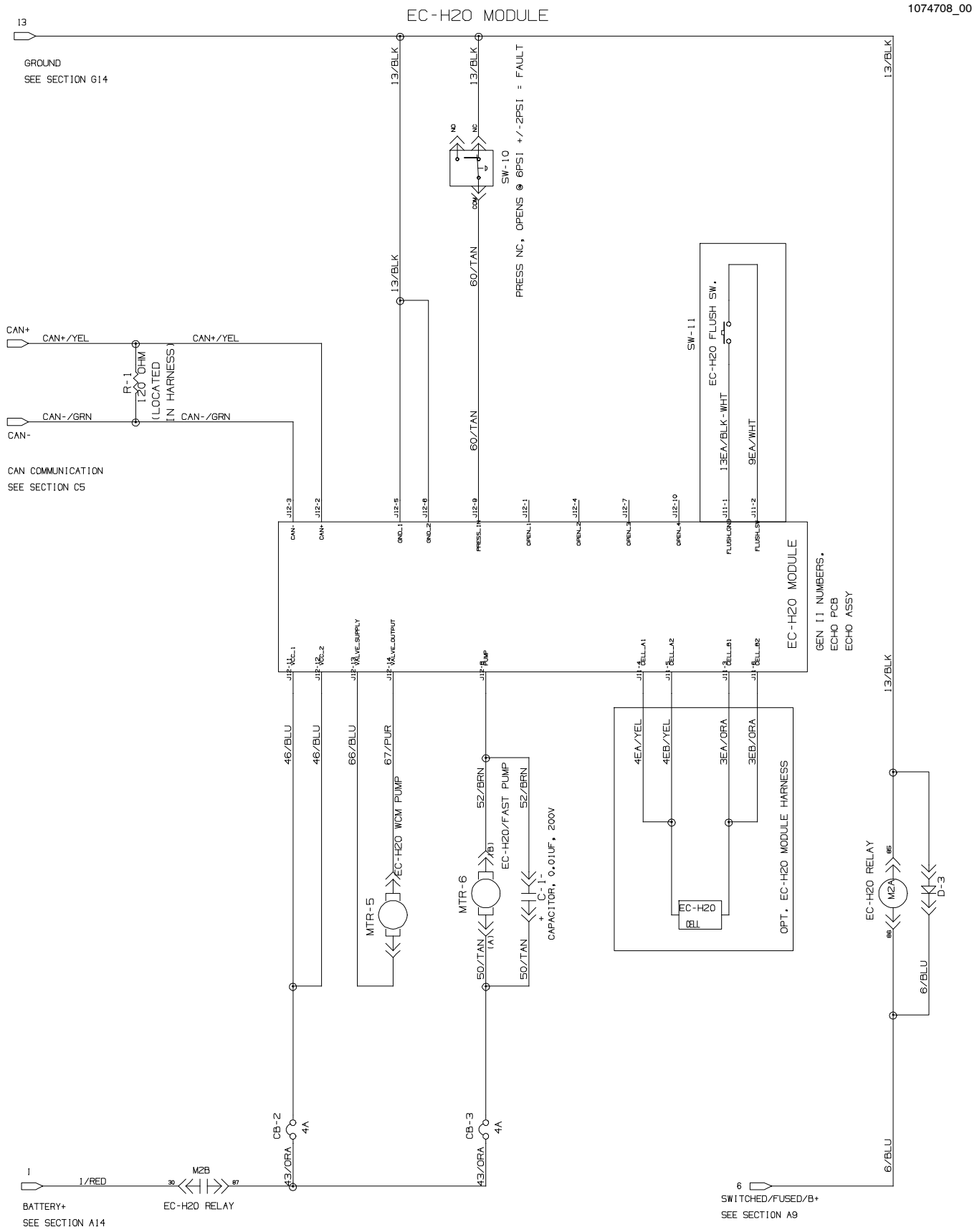

ELECTRICAL HARNESS, MAIN PROPEL (S/N 10891949 -) (PAGE 1 OF 3)

1076140_02

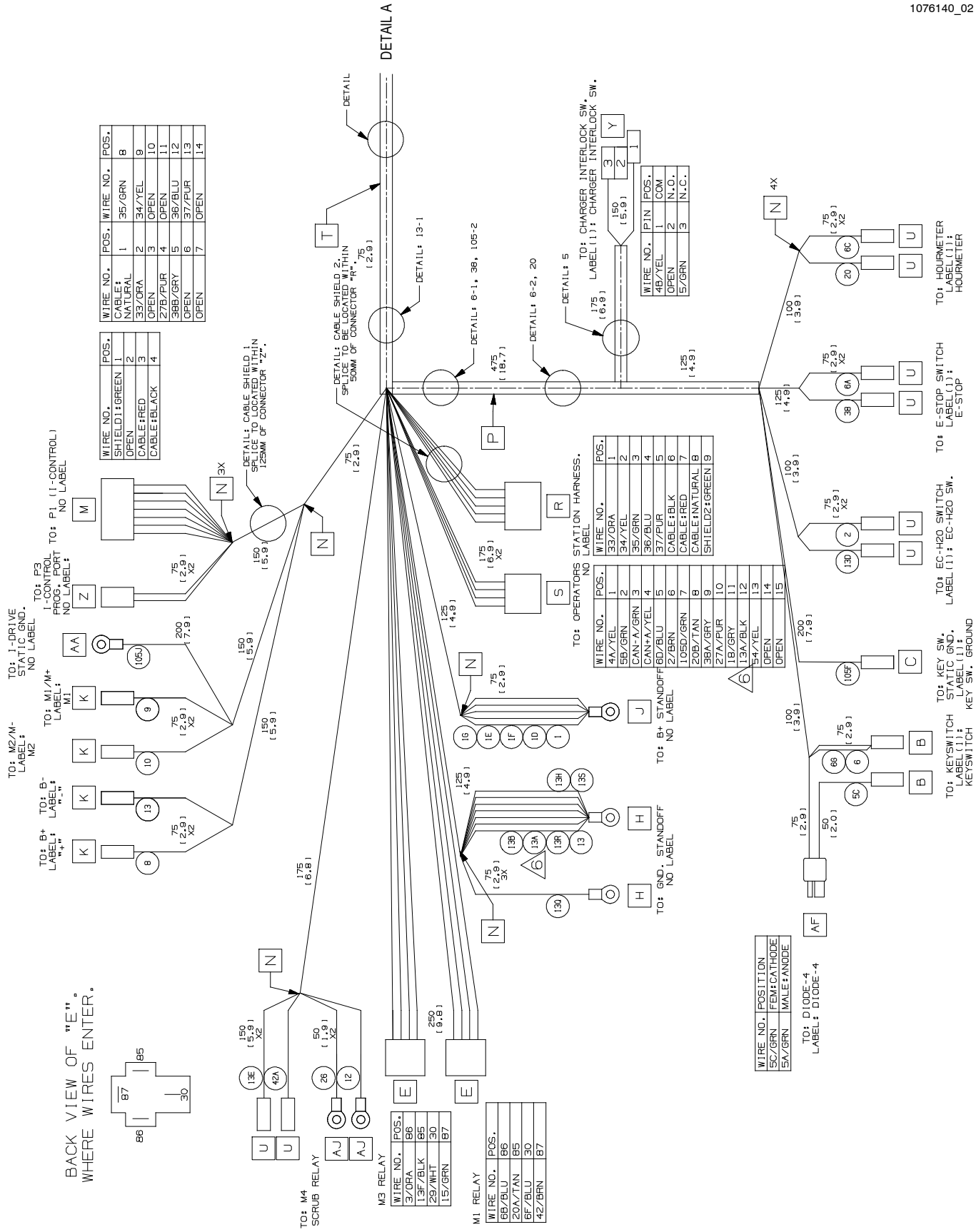

WIRE NO.	POS.
SHIELD1:GREEN	1
OPEN	2
CABLE:RED	3
CABLE:BLACK	4

WIRE NO.	POS.	WIRE NO.	POS.
CABLE: NATURAL	1	35/GRN	8
33/ORA	2	34/YEL	9
OPEN	3	OPEN	10
27B/PUR	4	OPEN	11
38B/GRY	5	36/BLU	12
OPEN	6	37/PUR	13
OPEN	7	OPEN	14

WIRE NO.	PIN	POS.
4B/YEL	1	COM
OPEN	2	N.O.
5/GRN	3	N.C.

WIRE NO.	POS.
33/ORA	1
34/YEL	2
35/GRN	3
36/BLU	4
37/PUR	5
CABLE:BLK	6
CABLE:RED	7
CABLE:NATURAL	8
SHIELD2:GREEN	9

WIRE NO.	POS.
4A/YEL	1
5B/GRN	2
CAN-A/GRN	3
CAN+A/YEL	4
6D/BLU	5
2/BRN	6
105D/GRN	7
20B/TAN	8
38A/GRY	9
27A/PUR	10
1B/GRY	11
13A/BLK	12
54/YEL	13
OPEN	14
OPEN	15

WIRE NO.	POSITION
5C/GRN	FEM:CATHODE
5A/GRN	MALE:ANODE

WIRE NO.	POS.
3/ORA	86
13F/BLK	85
29/WHT	30
15/GRN	87

WIRE NO.	POS.
6B/BLU	86
20A/TAN	85
6F/BLU	30
42/BRN	87

ELECTRICAL HARNESS, MAIN PROPEL (S/N 10891949 -) (PAGE 2 OF 3)

1076140_02

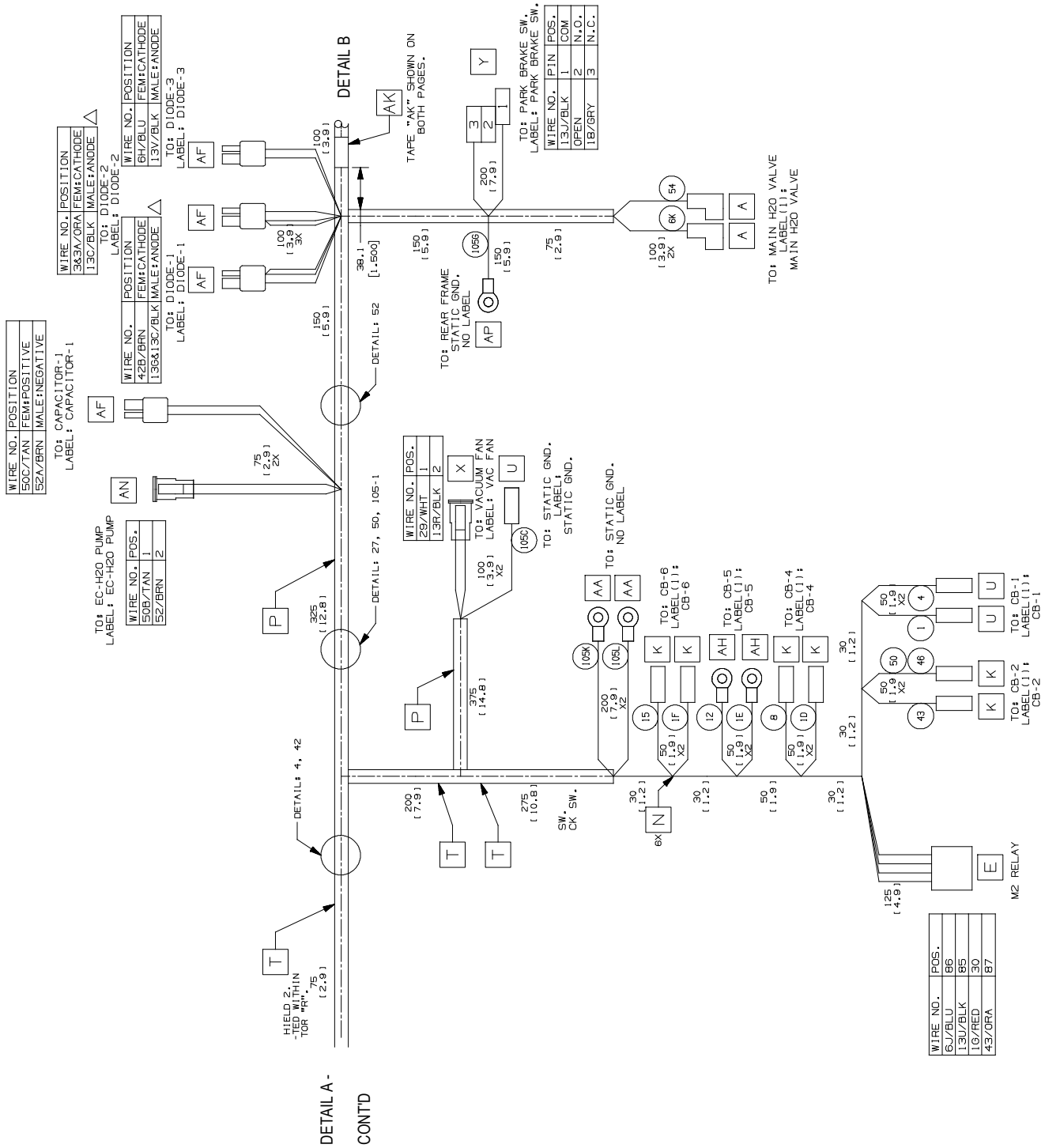

ELECTRICAL HARNESS, MAIN PROPEL (S/N 10891949 -) (PAGE 3 OF 3)

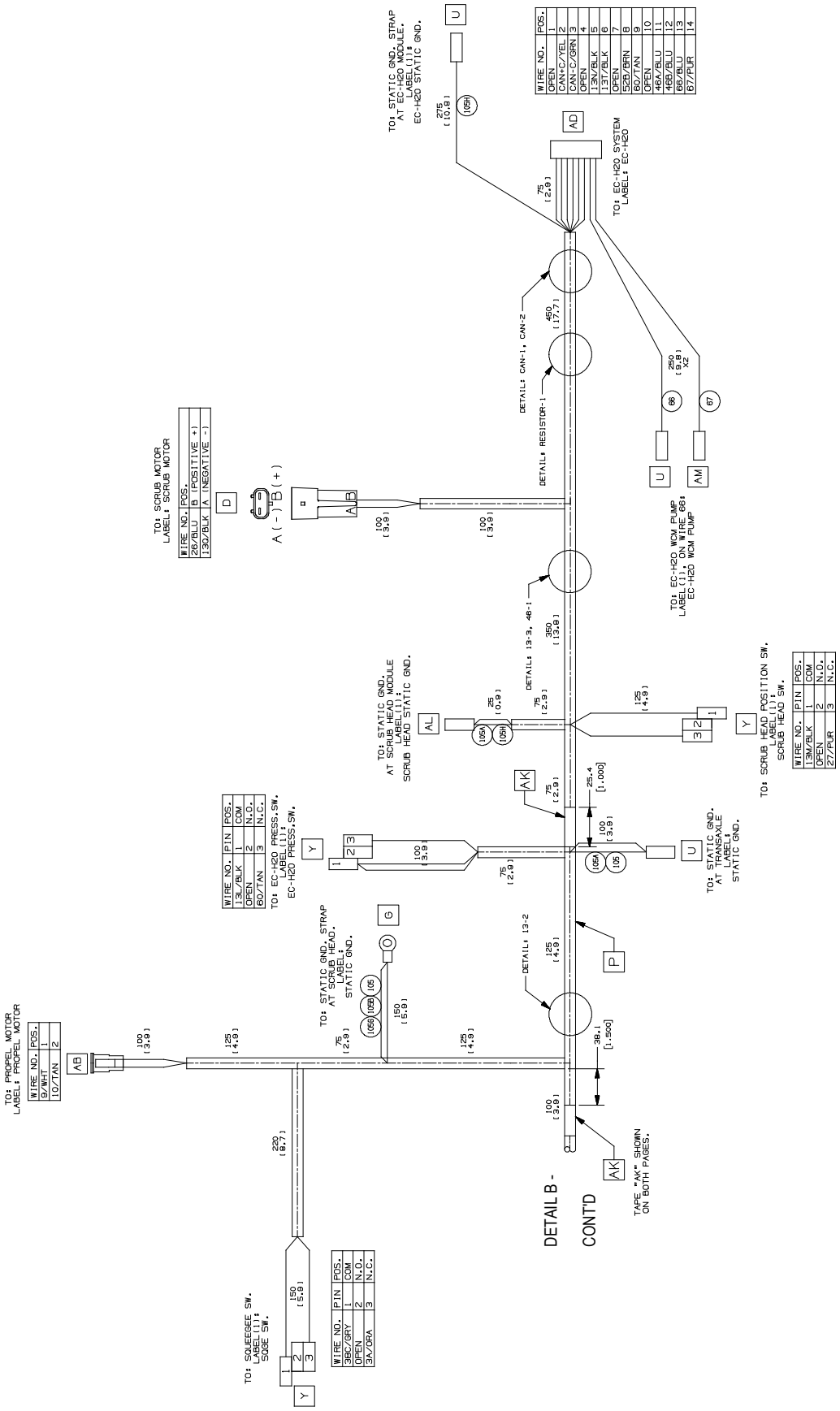

ELECTRICAL HARNESS, MAIN PROPEL (S/N 10891949 -)

	Part No.	Serial Number	Description	Qty.
∇	9015155	(10891949- 20000000)	Harness Kit, Main, Ele [Vw, Base,Propel]	1
▲	222290	(10891949- 20000000)	Diode, Ele, Plug	4
▲	1040868	(10000000- 20000000)	Capacitor, Plug [.01 Uf, 200v]	1

∇ ASSEMBLY

▲ INCLUDED IN ASSEMBLY

ELECTRICAL HARNESS, MAIN PROPEL (S/N 10822349 - 10891948) (PAGE 1 OF 3)

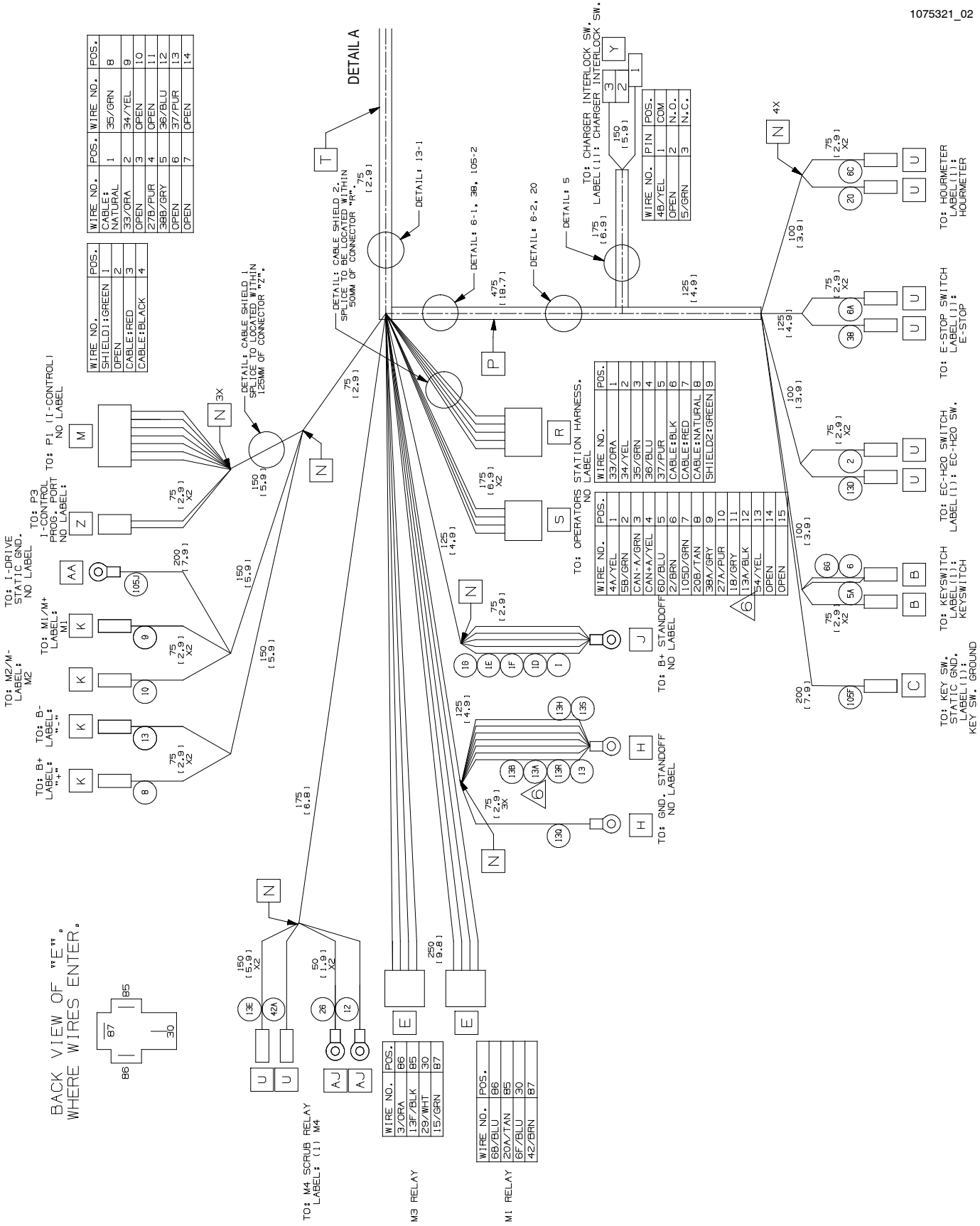

WIRE NO.	POS.
SHIELD1:GREEN	1
OPEN	2
CABLE:RED	3
CABLE:BLACK	4

WIRE NO.	POS.	WIRE NO.	POS.
CABLE: NATURAL	1	35/GRN	8
33/ORA	2	34/YEL	9
OPEN	3	OPEN	10
27B/PUR	4	OPEN	11
38B/GRY	5	36/BLU	12
OPEN	6	37/PUR	13
OPEN	7	OPEN	14

WIRE NO.	PIN	POS.
4B/YEL	1	COM
OPEN	2	N.O.
5/GRN	3	N.C.

WIRE NO.	POS.
4A/YEL	1
5B/GRN	2
CAN-A/GRN	3
CAN+A/YEL	4
6D/BLU	5
2/BRN	6
105D/GRN	7
20B/TAN	8
38A/GRY	9
27A/PUR	10
1B/GRY	11
13A/BLK	12
54/YEL	13
OPEN	14
OPEN	15

WIRE NO.	POS.
33/ORA	1
34/YEL	2
35/GRN	3
36/BLU	4
37/PUR	5
CABLE:BLK	6
CABLE:RED	7
CABLE:NATURAL	8
SHIELD2:GREEN	9

WIRE NO.	POS.
3/ORA	86
13F/BLK	85
29/WHT	30
15/GRN	87

WIRE NO.	POS.
6B/BLU	86
20A/TAN	85
6F/BLU	30
42/BRN	87

ELECTRICAL HARNESS, MAIN PROPEL (S/N 10822349 - 10891948) (PAGE 2 OF 3)

1075321_02

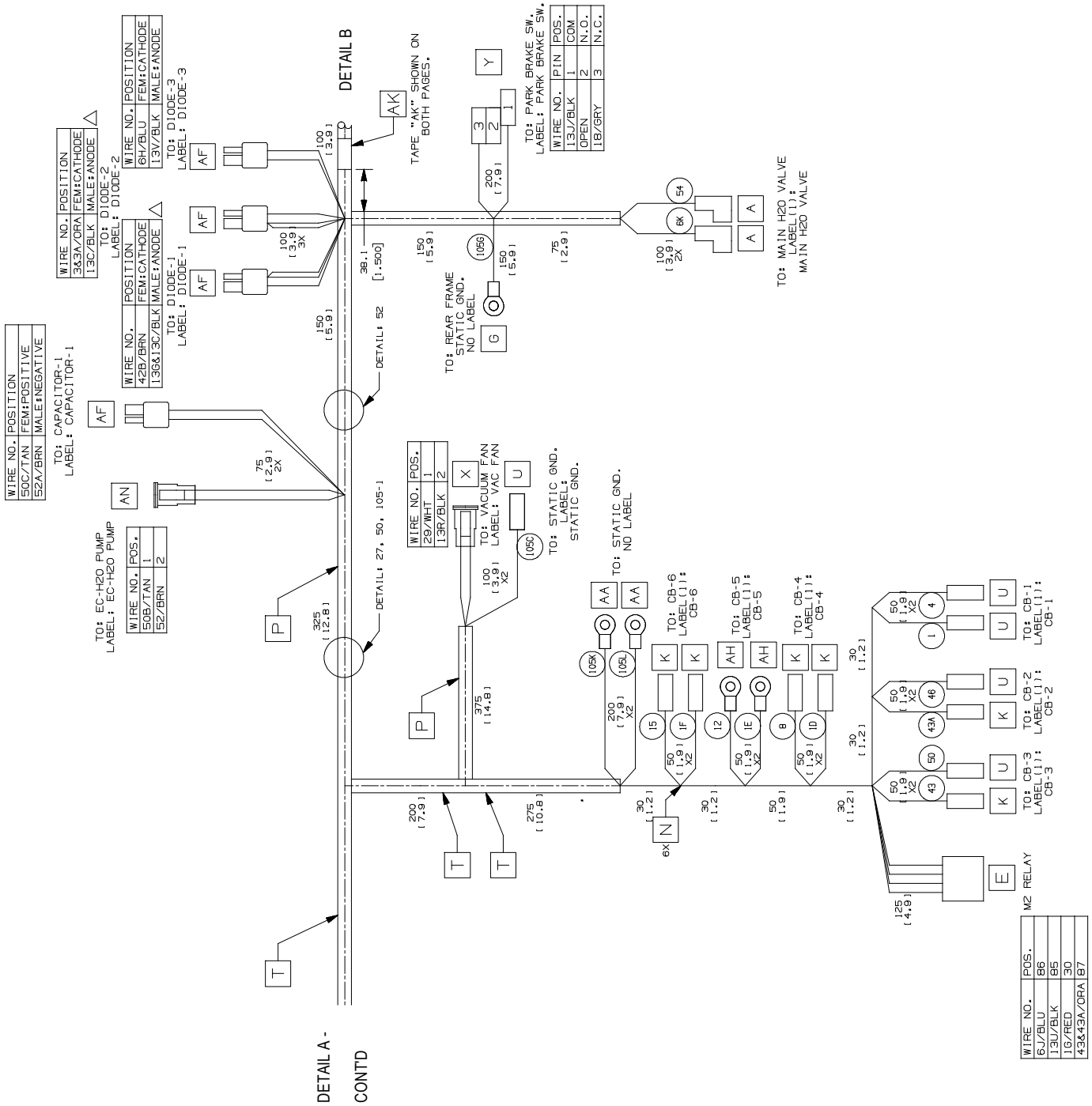

ELECTRICAL HARNESS, MAIN PROPEL (S/N 10822349 - 10891948) (PAGE 3 OF 3)

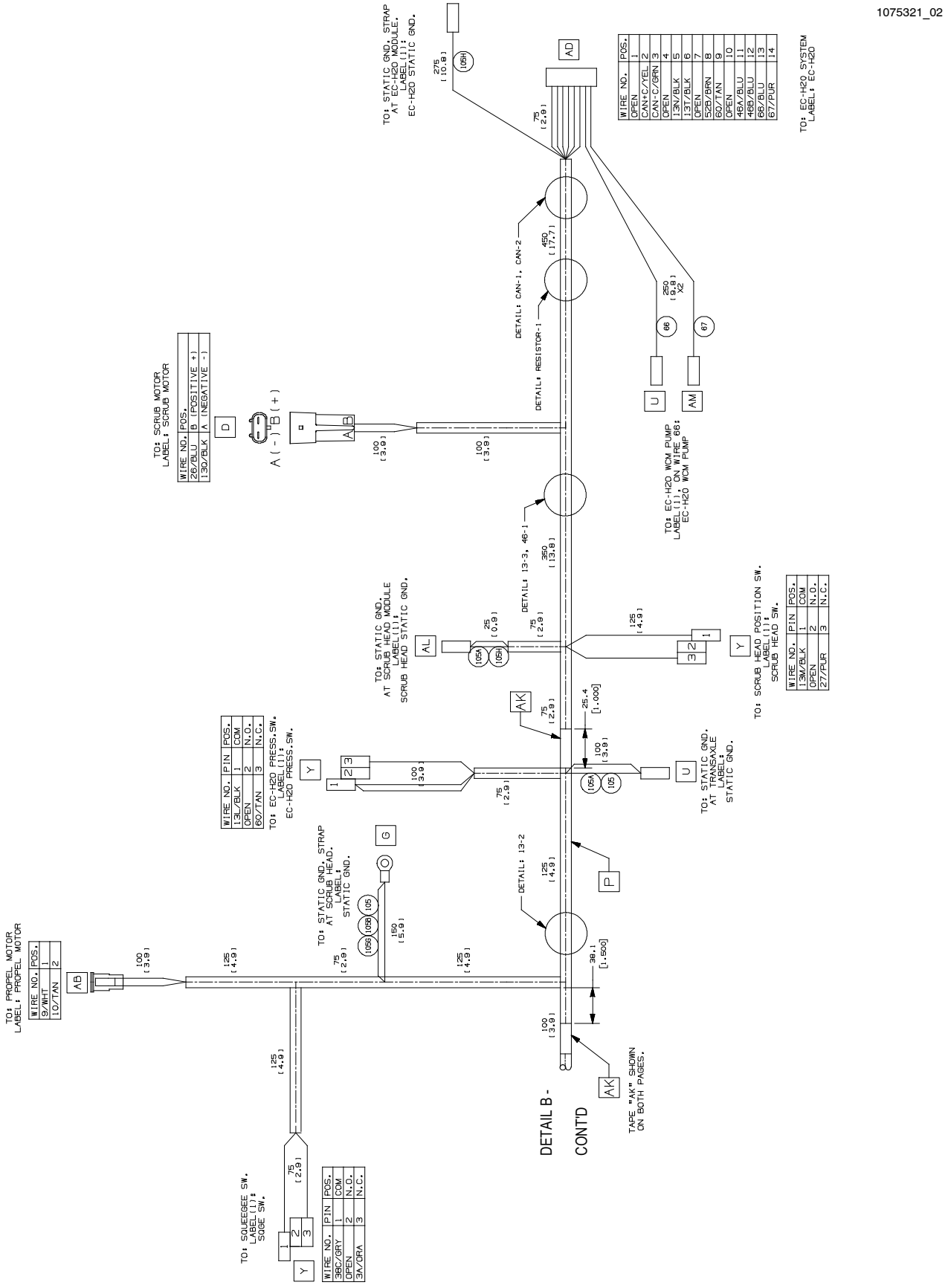

ELECTRICAL HARNESS, MAIN PROPEL (S/N 10822349 - 10891948)

	Part No.	Serial Number	Description	Qty.
∇	1075321	(10822349- 10891948)	Harness, Main, Ele [Vw, Base, Propel] (Replaced By 9015155)	1
▲	222290	(10000000- 20000000)	Diode, Ele, Plug	3
▲	1040868	(10000000- 20000000)	Capacitor, Plug [.01 Uf, 200v]	1

∇ ASSEMBLY

▲ INCLUDED IN ASSEMBLY

ELECTRICAL HARNESS, MAIN PROPEL (S/N 10000000 - 10822348) (PAGE 1 OF 3)

1073676

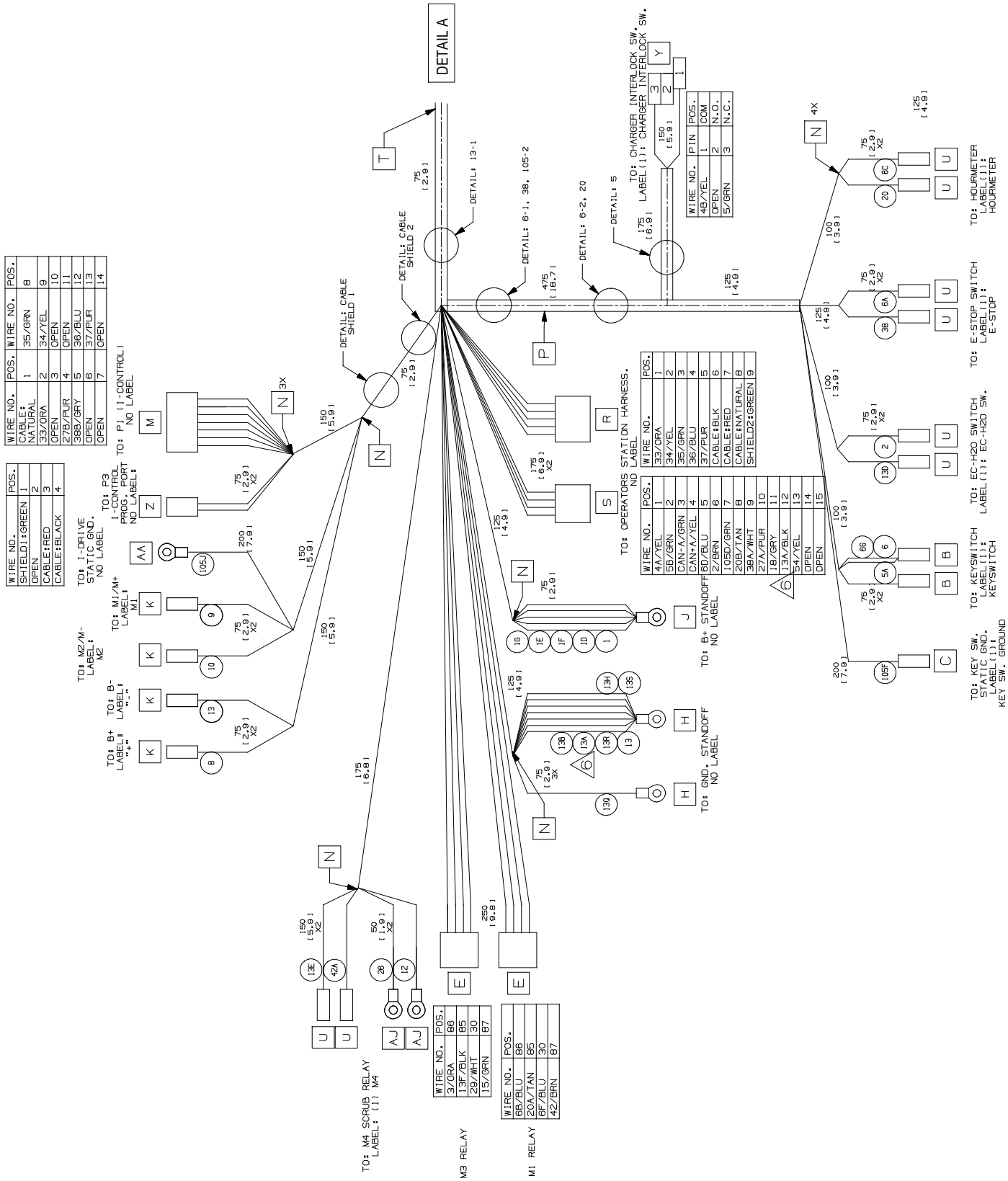

ELECTRICAL HARNESS, MAIN PROPEL (S/N 10000000 - 10822348) (PAGE 2 OF 3)

1073676

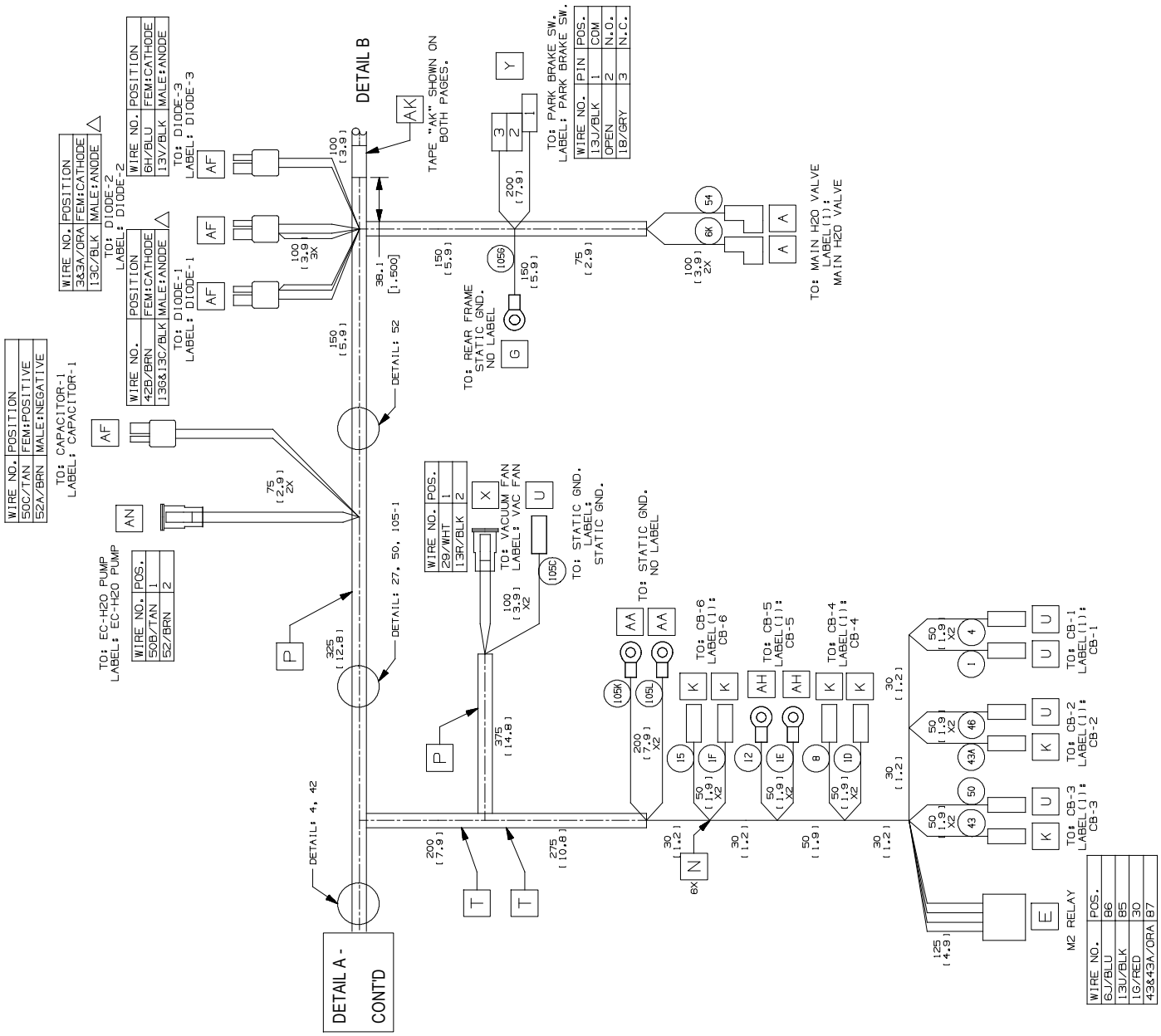

ELECTRICAL HARNESS, MAIN PROPEL (S/N 10000000 - 10822348) (PAGE 3 OF 3)

1073676

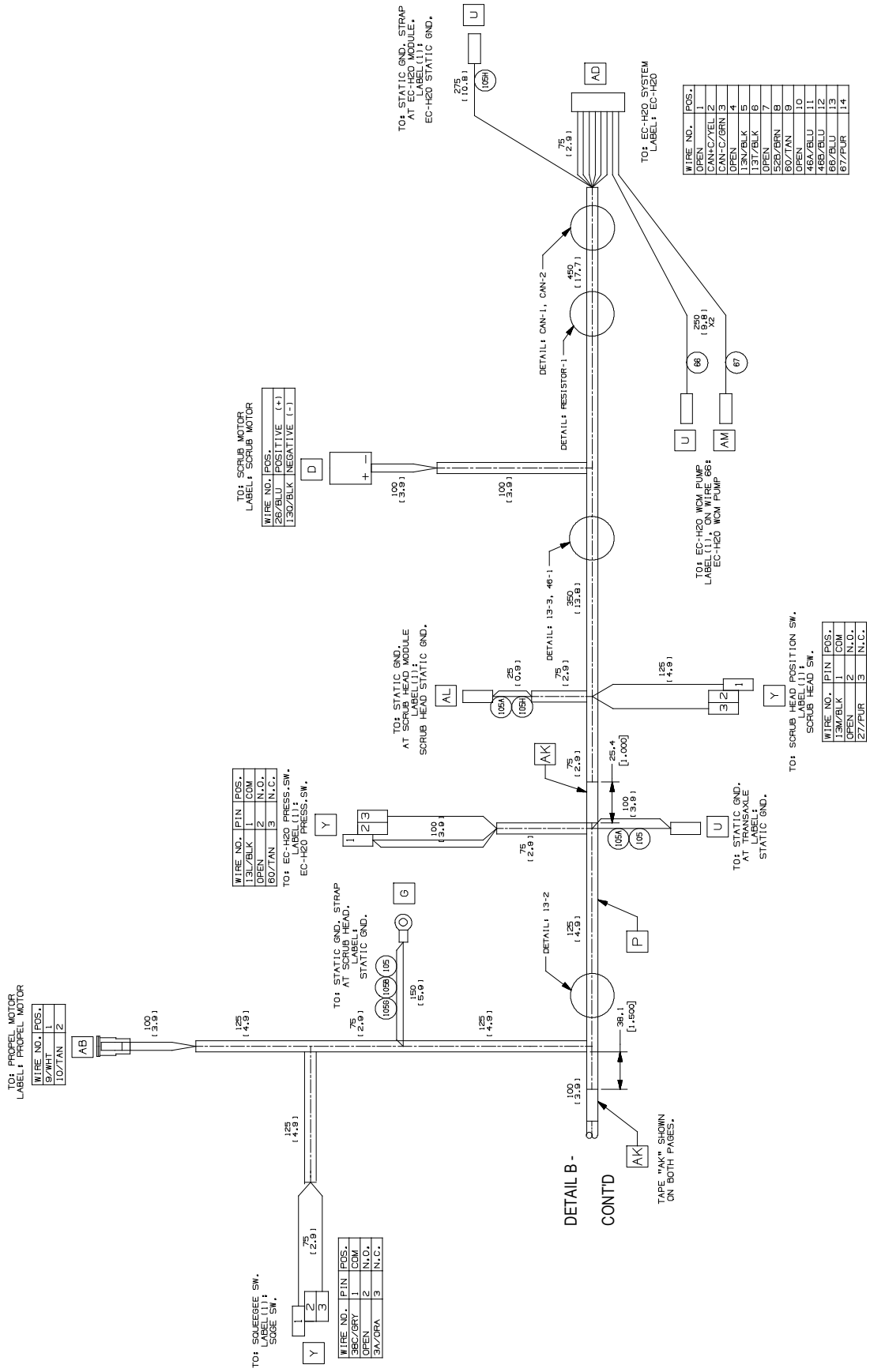

ELECTRICAL HARNESS, MAIN PROPEL (S/N 10000000 - 10822348)

	Part No.	Serial Number	Description	Qty.
∇	1073676	(10000000- 10822348)	Harness, Main, Ele [Vw, Base, Propel] (Replaced By 9015155)	1
▲	222290	(10000000- 20000000)	Diode, Ele, Plug	3
▲	1040868	(10000000- 20000000)	Capacitor, Plug [.01 Uf, 200v]	1

∇ ASSEMBLY

▲ INCLUDED IN ASSEMBLY

ELECTRICAL HARNESS, MAIN PUSH (S/N 10891710 -) (PAGE 1 OF 3)

1076141_02

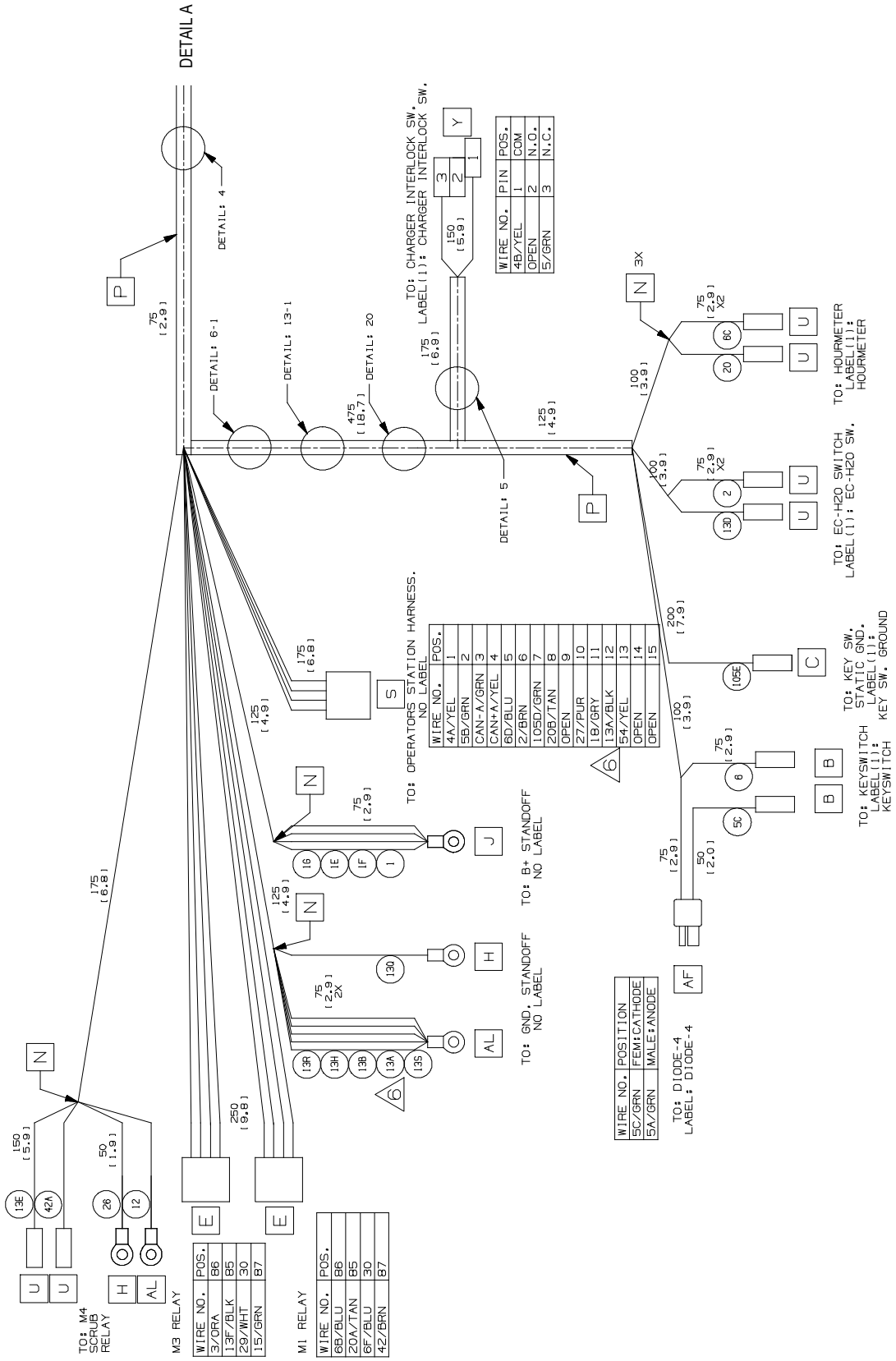

ELECTRICAL HARNESS, MAIN PUSH (S/N 10891710 -) (PAGE 2 OF 3)

1076141_02

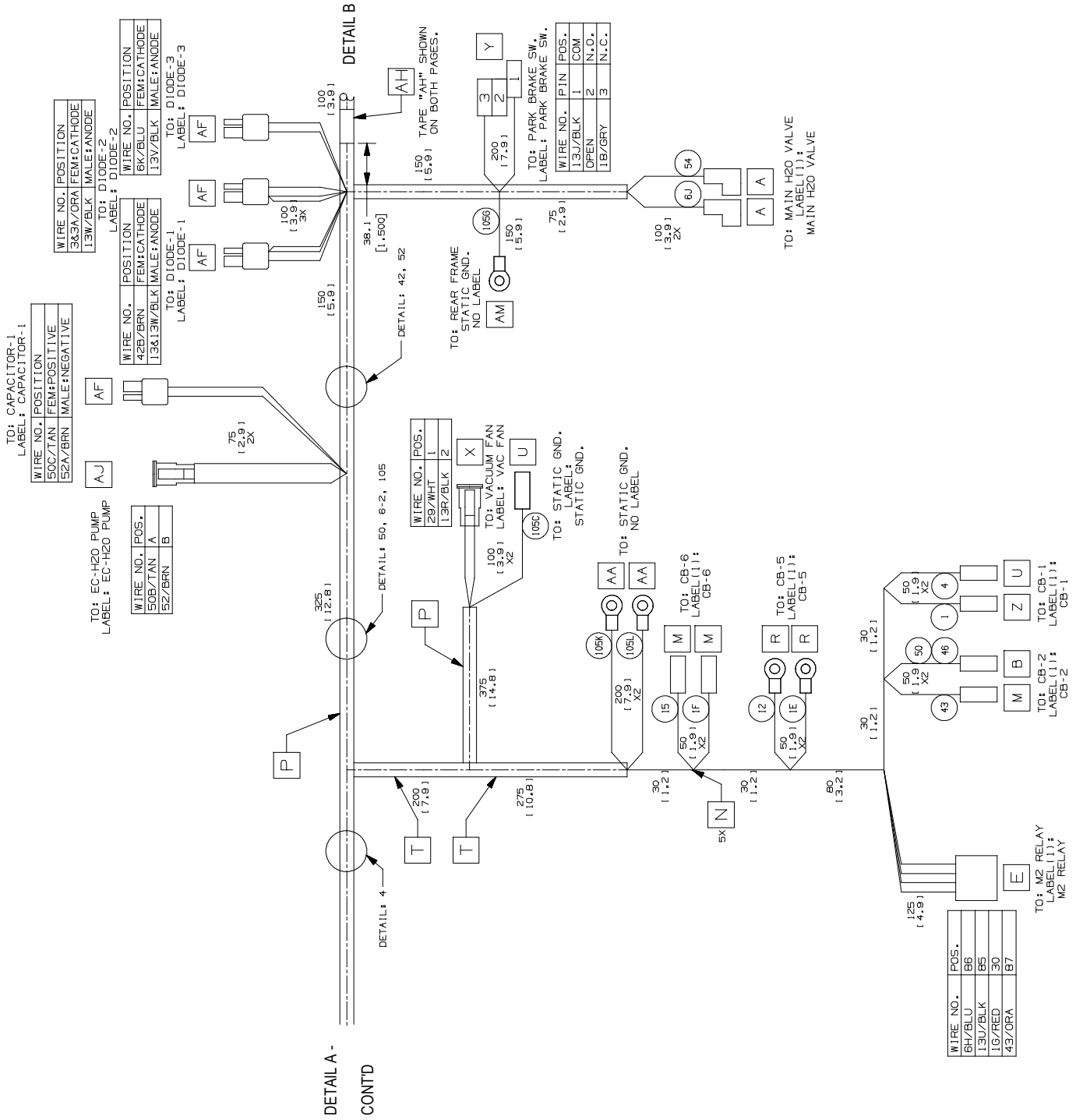

ELECTRICAL HARNESS, MAIN PUSH (S/N 10891710 -) (PAGE 3 OF 3)

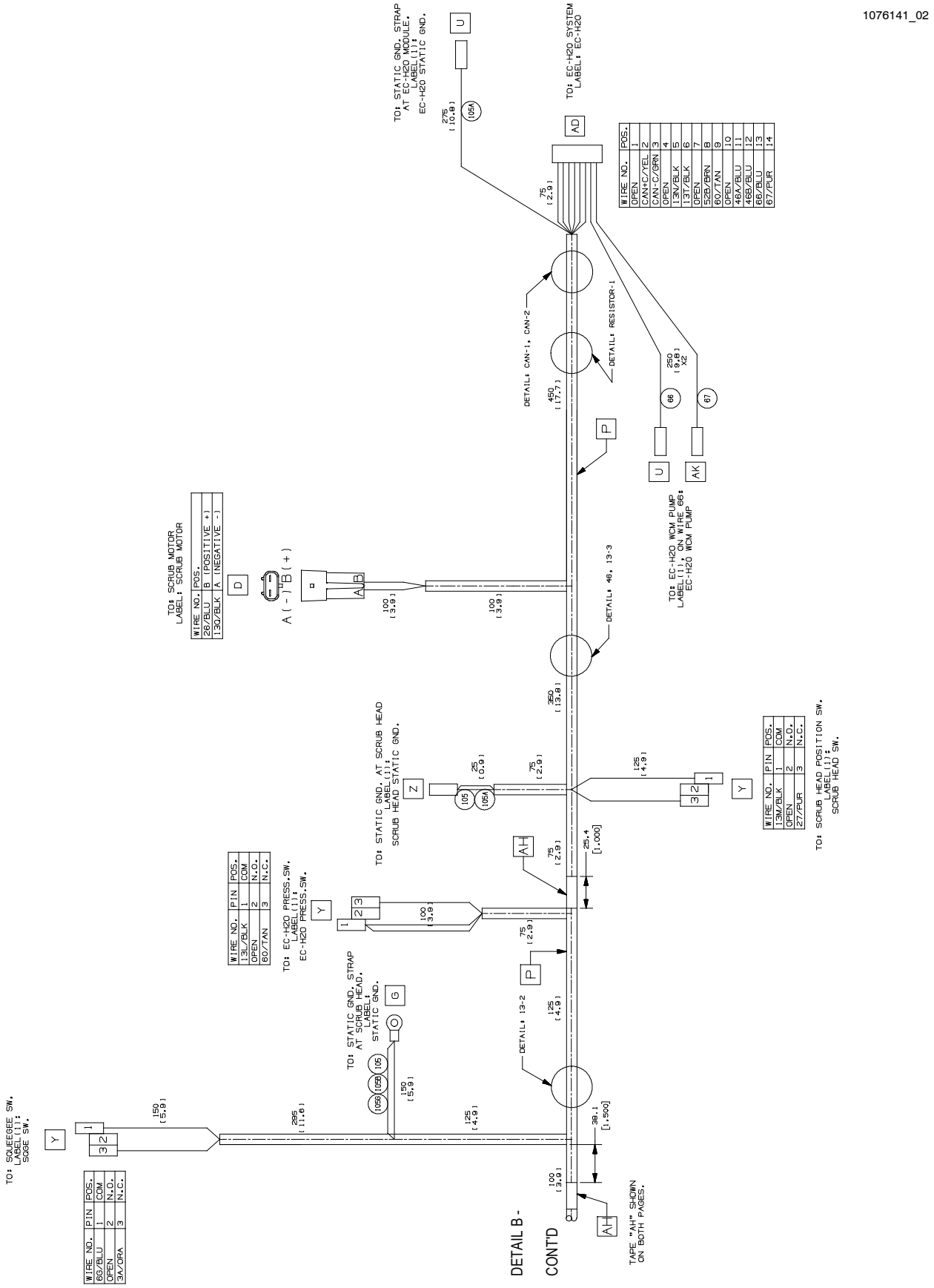

ELECTRICAL HARNESS, MAIN PUSH (S/N 10891710 -)

	Part No.	Serial Number	Description	Qty.
∇	9015156	(10891710- 20000000)	Harness Kit, Main, Ele [Vw, Base, Push]	1
▲	222290	(10891710- 20000000)	Diode, Ele, Plug	4
▲	1040868	(10000000- 20000000)	Capacitor, Plug [.01 Uf, 200v]	1

∇ ASSEMBLY

▲ INCLUDED IN ASSEMBLY

ELECTRICAL HARNESS, MAIN PUSH (S/N 10825202 - 10891709) (PAGE 1 OF 3)

1075322_02

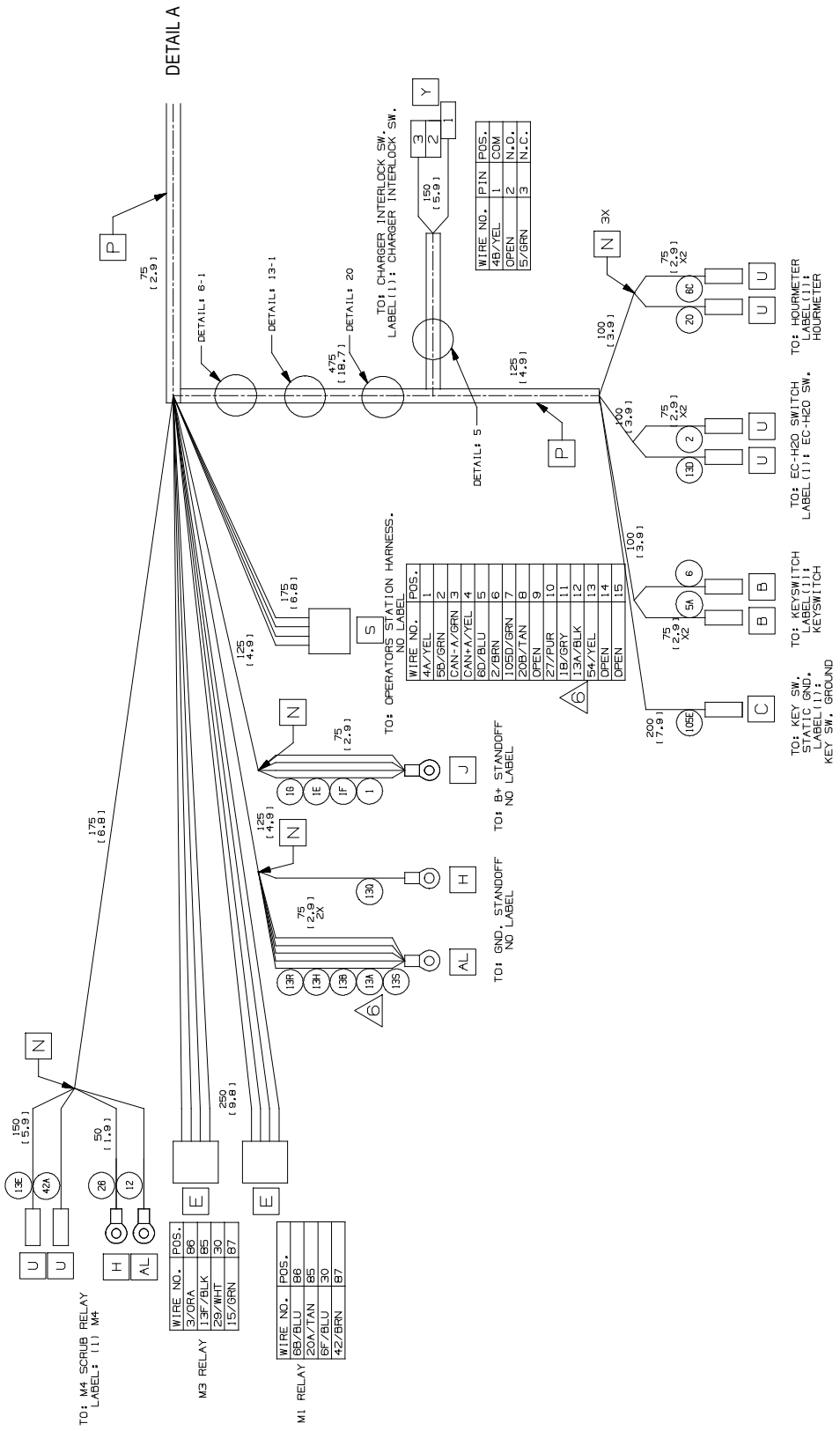

ELECTRICAL HARNESS, MAIN PUSH (S/N 10825202 - 10891709) (PAGE 2 OF 3)

1075322_02

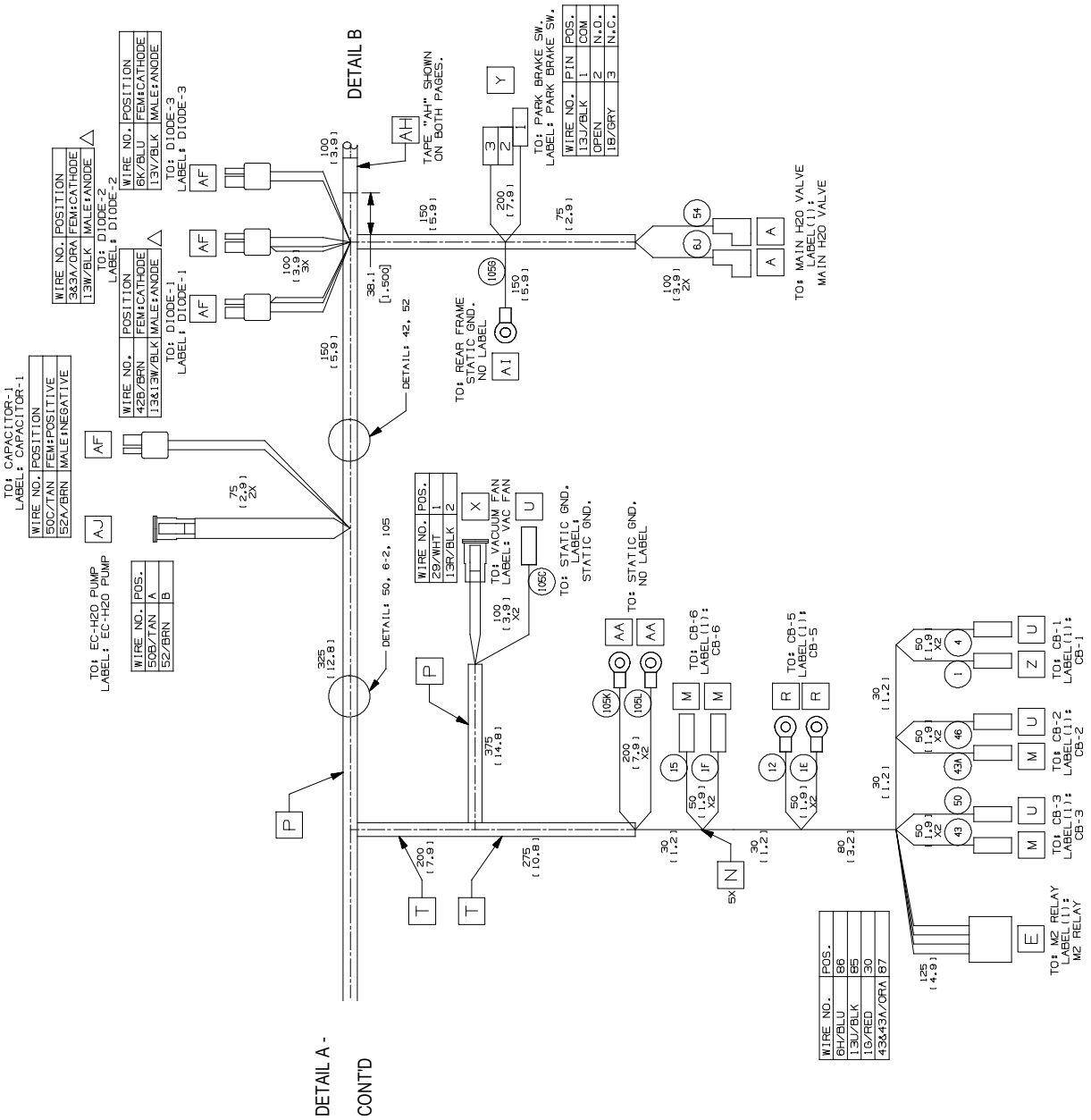

ELECTRICAL HARNESS, MAIN PUSH (S/N 10825202 - 10891709) (PAGE 3 OF 3)

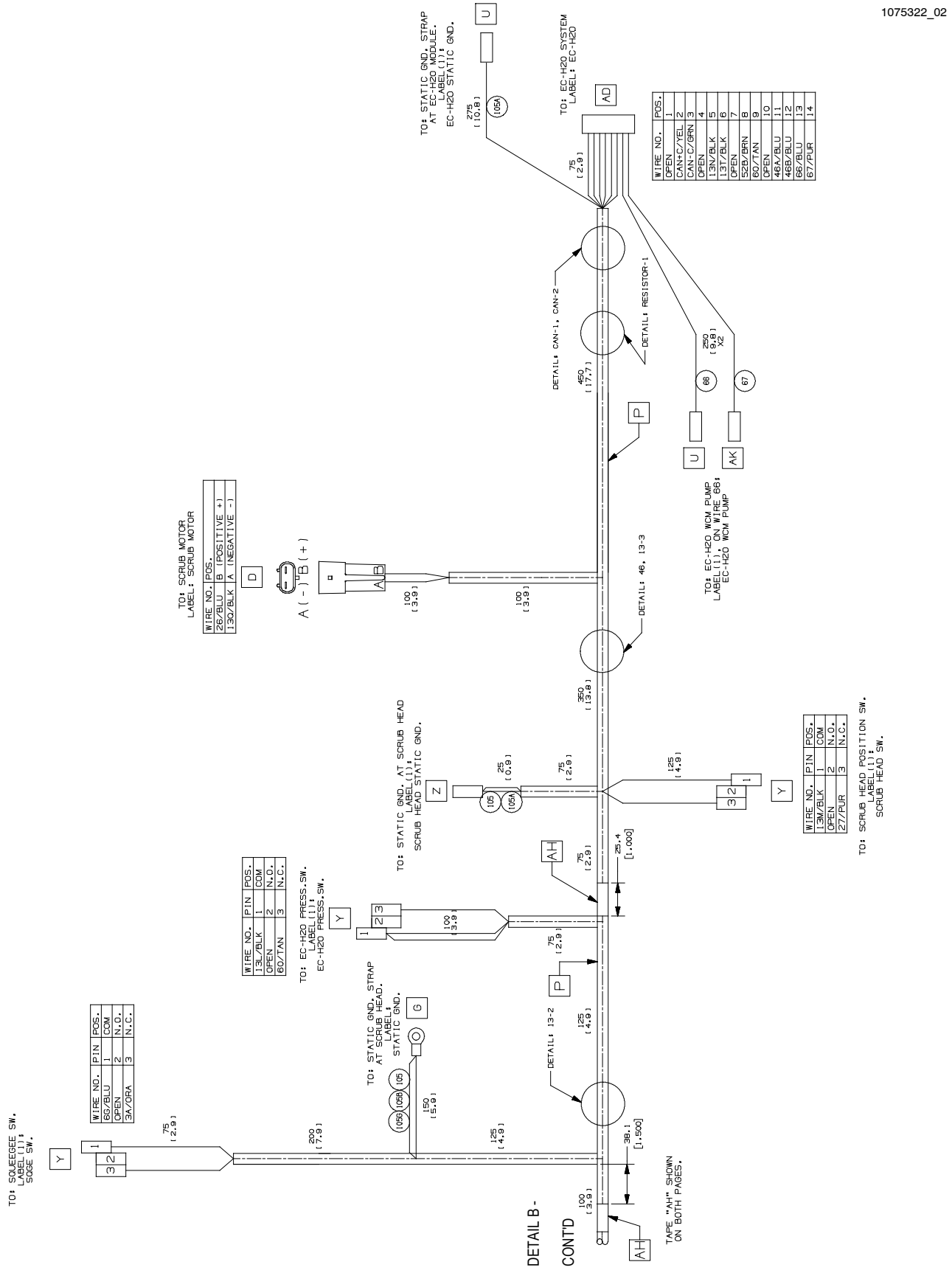

ELECTRICAL HARNESS, MAIN PUSH (S/N 10825202 - 10891709)

	Part No.	Serial Number	Description	Qty.
∇	1075322	(10825202- 10891709)	Harness, Main, Ele [Vw, Base, Push] (Replaced By 9015156)	1
▲	222290	(10000000- 20000000)	Diode, Ele, Plug	3
▲	1040868	(10000000- 20000000)	Capacitor, Plug [.01 Uf, 200v]	1

∇ ASSEMBLY

▲ INCLUDED IN ASSEMBLY

ELECTRICAL HARNESS, MAIN PUSH (S/N 10000000 - 10825201) (PAGE 1 OF 3)

1073677

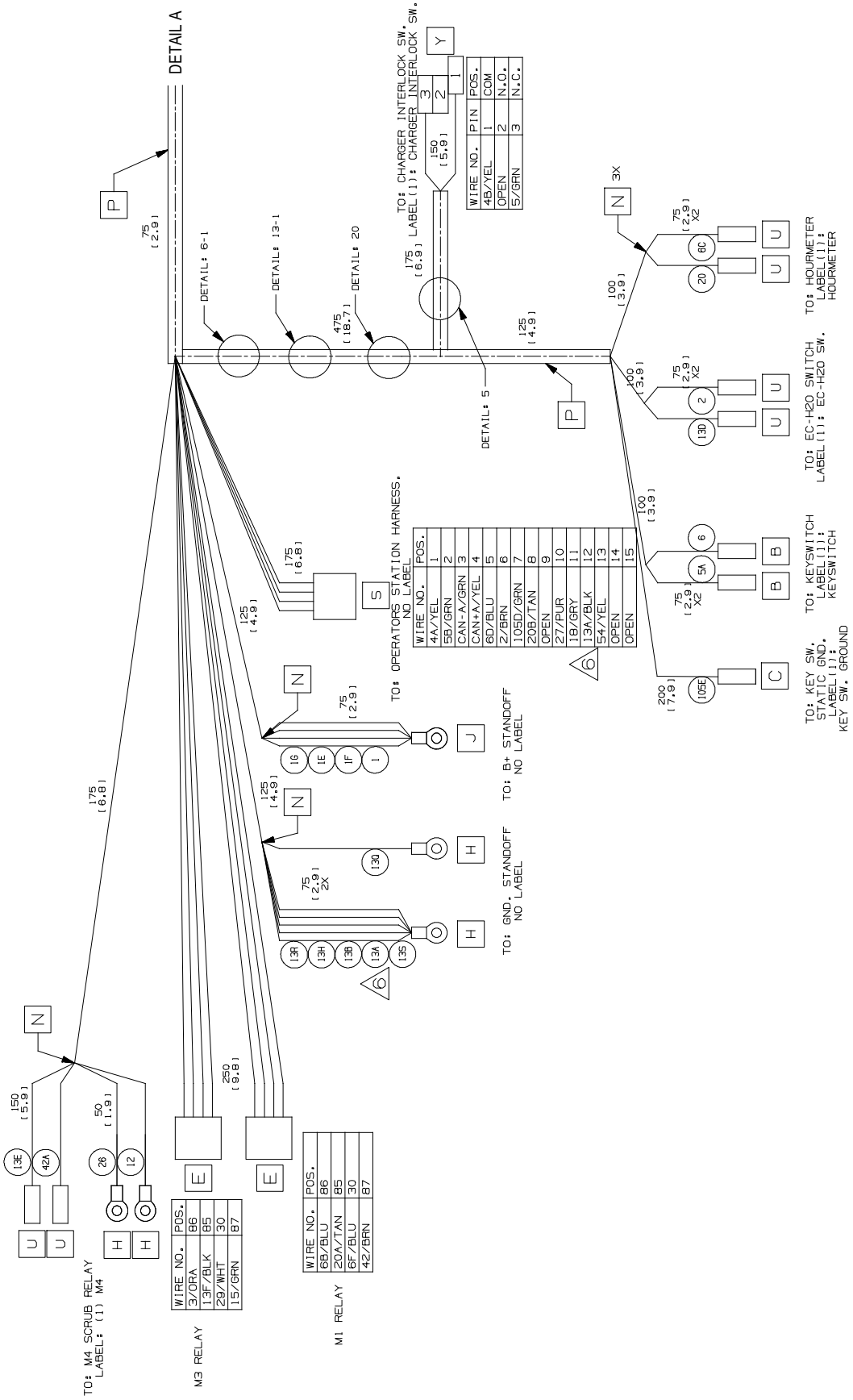

ELECTRICAL HARNESS, MAIN PUSH (S/N 10000000 - 10825201) (PAGE 2 OF 3)

1073677

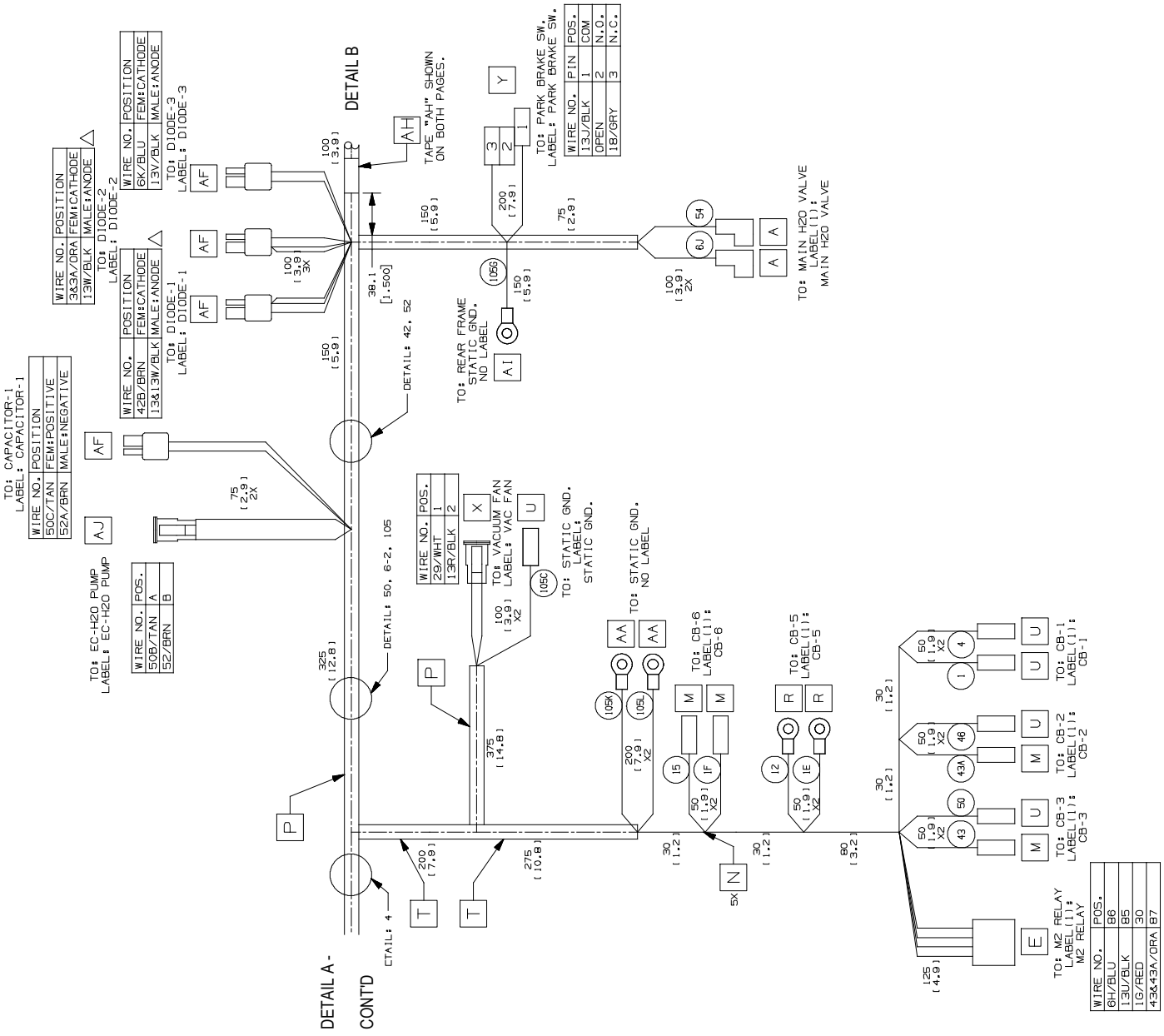

ELECTRICAL HARNESS, MAIN PUSH (S/N 10000000 - 10825201) (PAGE 3 OF 3)

1073677

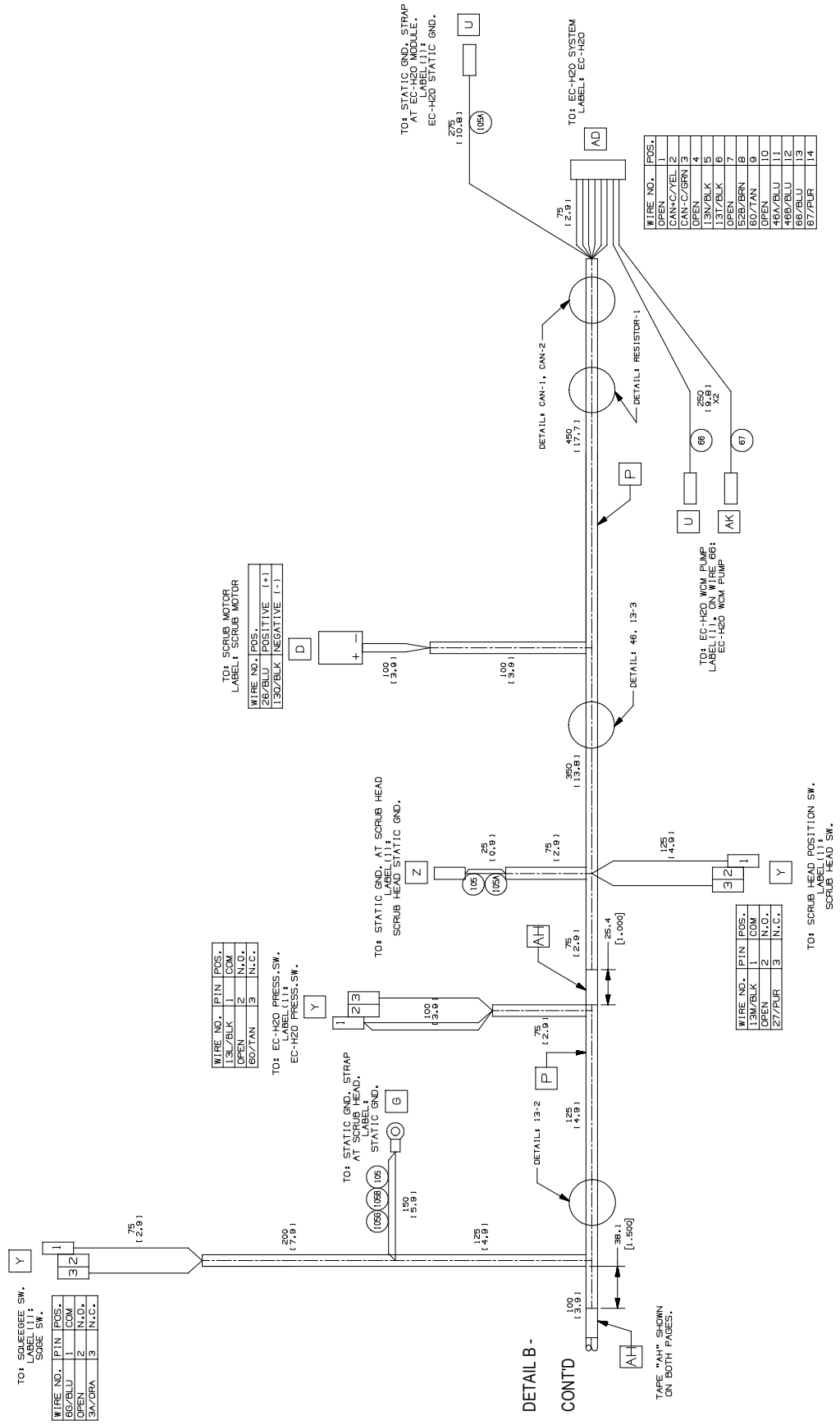

ELECTRICAL HARNESS, MAIN PUSH (S/N 10000000 - 10825201)

	Part No.	Serial Number	Description	Qty.
∇	1073677	(10000000- 10825201)	Harness, Main, Ele [Vw, Base, Push] (Replaced By 9015156)	1
▲	222290	(10000000- 20000000)	Diode, Ele, Plug	3
▲	1040868	(10000000- 20000000)	Capacitor, Plug [.01 Uf, 200v]	1

∇ ASSEMBLY

▲ INCLUDED IN ASSEMBLY

ELECTRICAL HARNESS, OPTIONS PROPEL

1073592

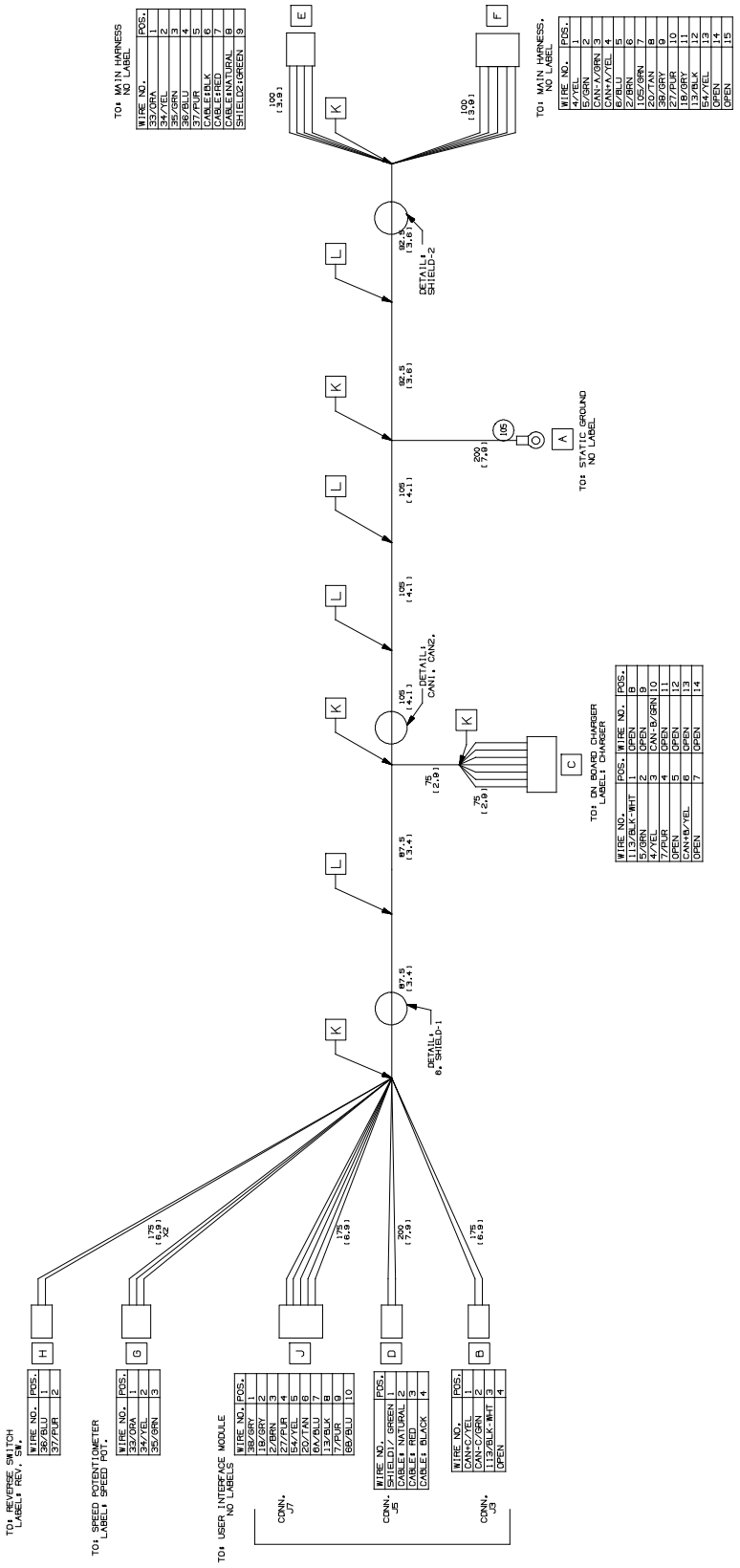

Part No.	Serial Number	Description	Qty.
1073592	(10000000- 20000000)	Harness, Ele [Vw, Op.Sta, Propel]	1

ELECTRICAL HARNESS, OPTIONS PUSH

1073593

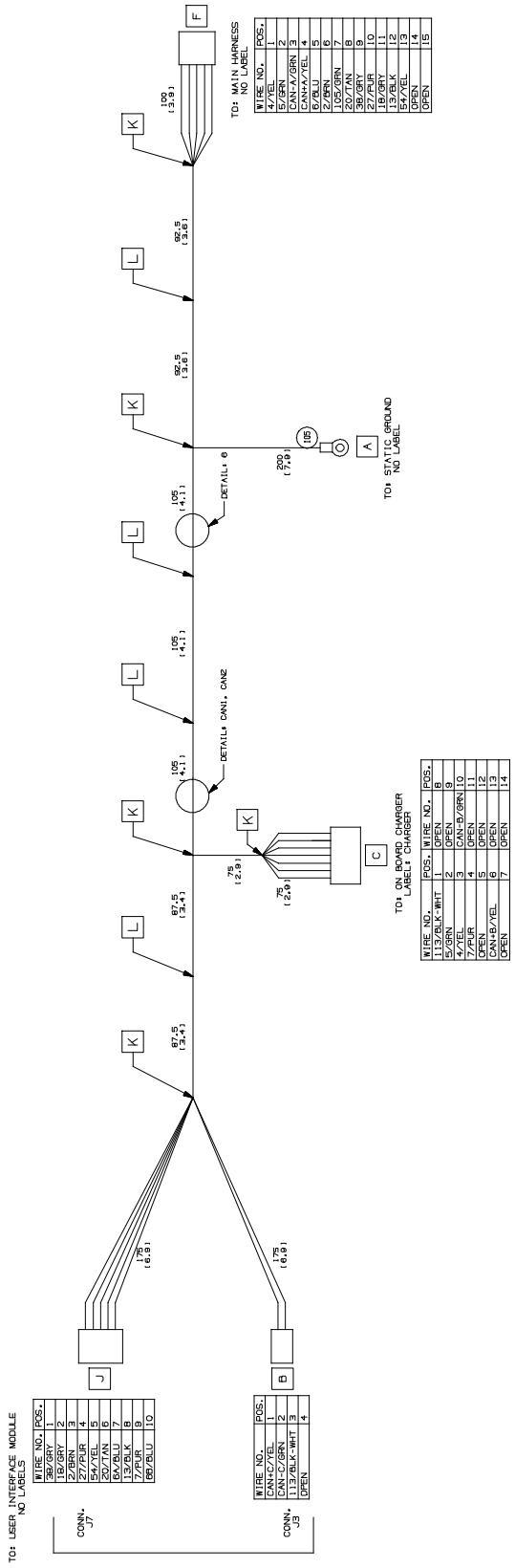

Part No.	Serial Number	Description	Qty.
1073593	(10000000- 20000000)	Harness, Ele [Vw, Op.Stat, Push]	1

ELECTRICAL HARNESS, BAIL SWITCH

1072524

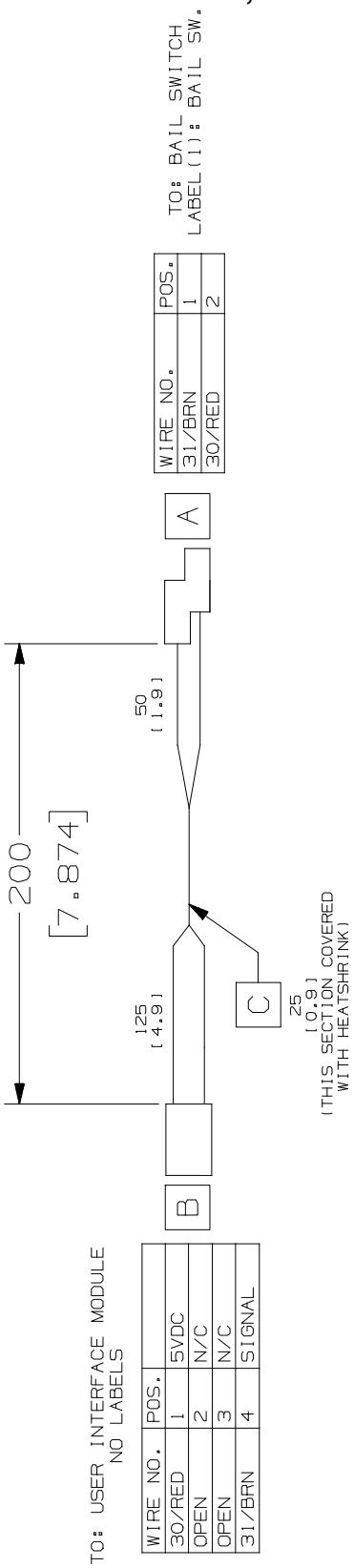

Part No.	Serial Number	Description	Qty.
1072524	(10000000- 20000000)	Harness, Ele [Bail Switch]	1

TELEMETRY GROUP

355684

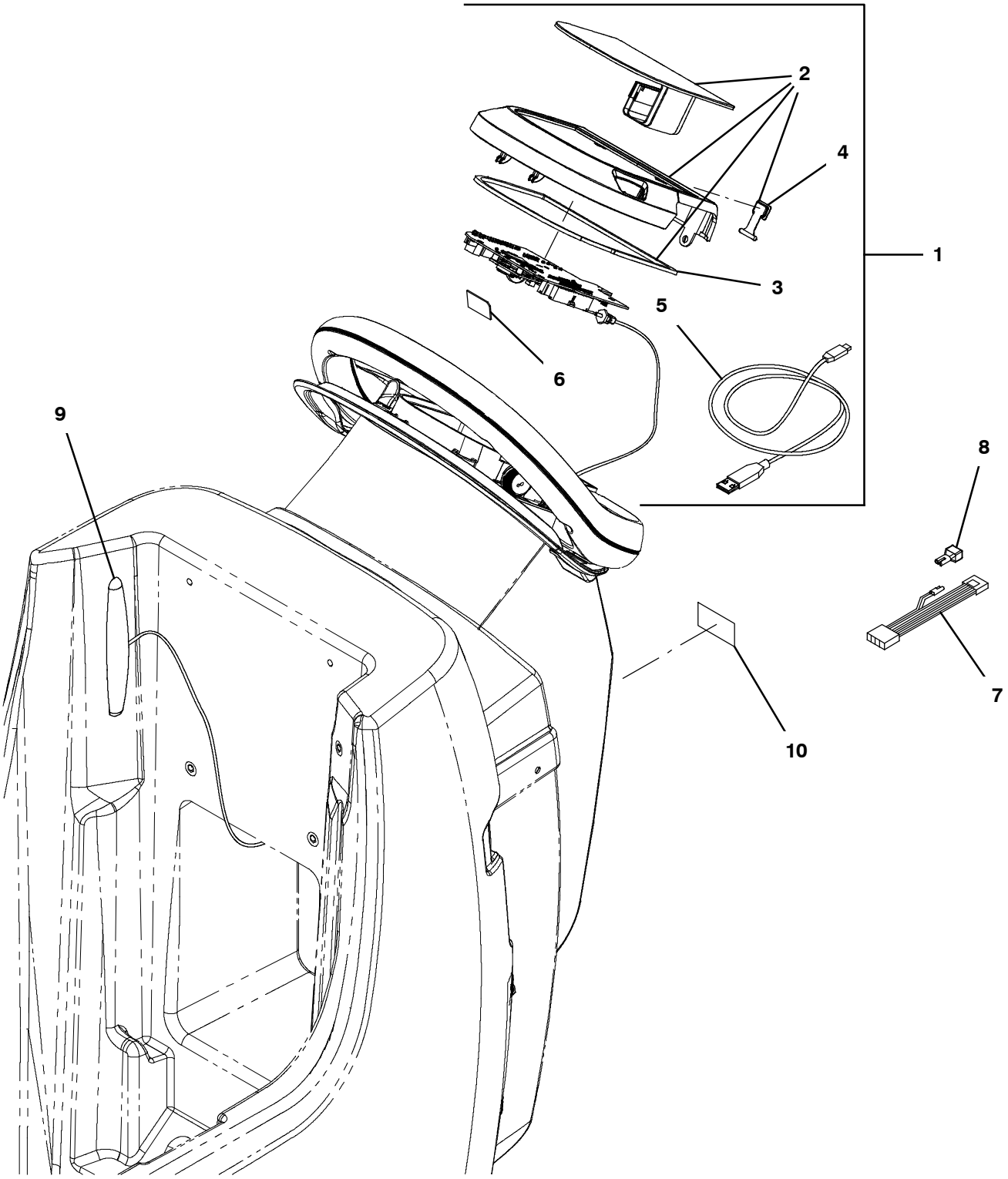

TELEMETRY GROUP

	Ref.	Part No.	Serial Number	Description	Qty.
∇	1	9017773*	(10000000- 20000000)	Bezel Kit, Push, Mem., Ci [T300e, Telem]	1
▲∇	2	9017874	(10000000- 20000000)	Screen Kit, Push, Memb., Ci [T300e/Ss]	1
▲▲	3	1245824	(MAR2020- 20000000)	Gasket, Console	1
▲▲	4	1205618	(10000000- 20000000)	Cap, Usb	1
▲	5	1071235	(10000000- 20000000)	Cable [Usb, 2m, A- Male To Mini- B- Male]	1
∇	1	9017774*	(10000000- 20000000)	Bezel Kit, Propel, Mem., Ci [T300e, Telem	1
▲∇	2	9017875	(10000000- 20000000)	Screen Kit, Propel, Memb., Ci [T300e/Ss]	1
▲▲	3	1245824	(MAR2020- 20000000)	Gasket, Console	1
▲▲	4	1205618	(10000000- 20000000)	Cap, Usb	1
▲	5	1071235	(10000000- 20000000)	Cable [Usb, 2m, A- Male To Mini- B- Male]	1
	6	9014186	(10000000- 20000000)	Kit, Telem, Ci [Sim, Usa, T300]	1
	6	9014187	(10000000- 20000000)	Kit, Telem, Ci [Sim, Intl, T300]	1
	7	1075195	(10000000- 20000000)	Harness, Ele, Adaptor [T300, Amii]	1
	8	222290	(10000000- 20000000)	Diode, Ele, Plug	1
	9	315724	(10000000- 20000000)	Antenna, Telem, 18.0 In [Gprs]	1
	10	1069580	(10000000- 20000000)	Label, Mach, Telem [Usa, Intl]	1

*** Requires Tennant *True* service or an authorized Tennant service provider**.

∇ ASSEMBLY

▲ INCLUDED IN ASSEMBLY

BATTERY LIFT OUT BOX KIT

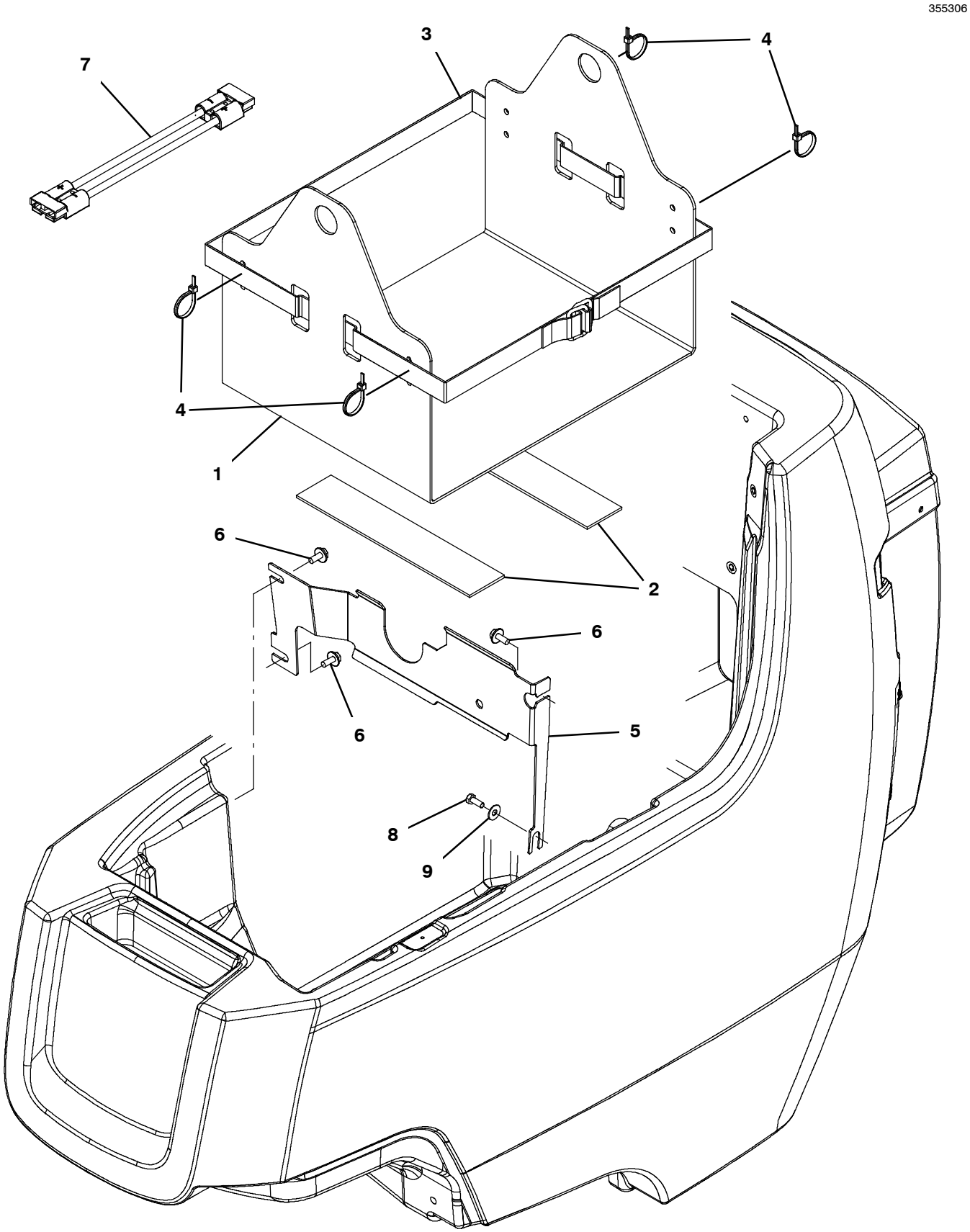

BATTERY LIFT OUT BOX KIT

	Ref.	Part No.	Serial Number	Description	Qty.
∇		9014173	(10000000- 20000000)	Box Kit, Lift, Batt, Am [T300/E/Ss300] (Additional Battery Cable Kit May Also Be Required)	1
▲	1	1207816	(10000000- 20000000)	Box, Battery [Lift- Out]	1
▲	2	1212689	(10000000- 20000000)	Pad, Box, Battery	2
▲	3	1208697	(10000000- 20000000)	Strap, Pyp, Buckle, Friction	1
▲	4	130773	(10000000- 20000000)	Tie, Cable, Nyl, 11.0l, .14w, 3.0 Max. D	4
▲	5	1214509	(10000000- 20000000)	Bracket, Deflector, Battery	1
▲	6	1034731	(10000000- 20000000)	Screw, Hex, M6 X 1.00 X 16, Sems, Ss	3
▲	7	1074798	(10000000- 20000000)	Cable, Adaptor, Batt [Sb120- Sb50, Red] (Off- Board Charger Models Only)	1
▲	8	11329	(10000000- 20000000)	Screw, Hex, M6 X 1.00 X 16, Nl, Ss	1
▲	9	01684	(10000000- 20000000)	Washer, Flat, 0.27b 0.69d .05, Ss	1

∇ ASSEMBLY

▲ INCLUDED IN ASSEMBLY

HYDROLINK® BATTERY WATERING SYSTEM KIT

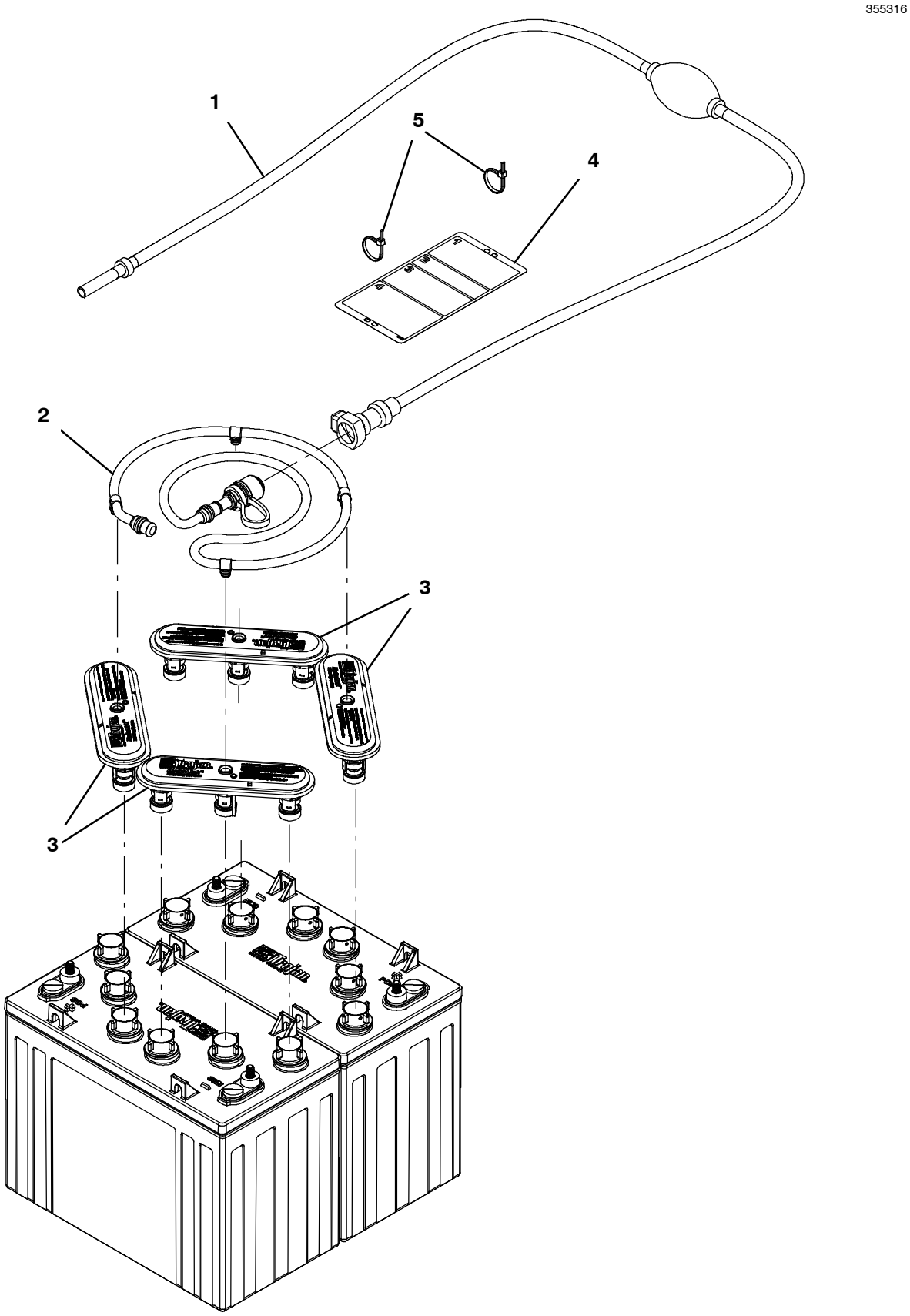

HYDROLINK® BATTERY WATERING SYSTEM KIT

	Ref.	Part No.	Serial Number	Description	Qty.
∇		9010300	(10000000- 20000000)	Battery Fill Kit, 24v, Ci [Hydrolink] (For Use Only With 150AH Trojan Batteries)	1
▲	1	1058939	(10000000- 20000000)	Pump Kit, Fill, Battery	1
▲	2	1229544	(10000000- 20000000)	Tube, Water, Battery, 24vdc [Trojan]	1
▲	3	1204142	(10000000- 20000000)	Cap, Fill, Battery [Trojan]	4
▲	4	1071084	(10000000- 20000000)	Label, Tag, Battery [Hydrolink Watering]	1
▲	5	130773	(10000000- 20000000)	Tie, Cable, Nyl, 11.0l, .14w, 3.0 Max. D	2

∇ ASSEMBLY

▲ INCLUDED IN ASSEMBLY

HYDROLINK® IS A REGISTERED TRADEMARK OF TROJAN BATTERY COMPANY.

PARKING BRAKE GROUP

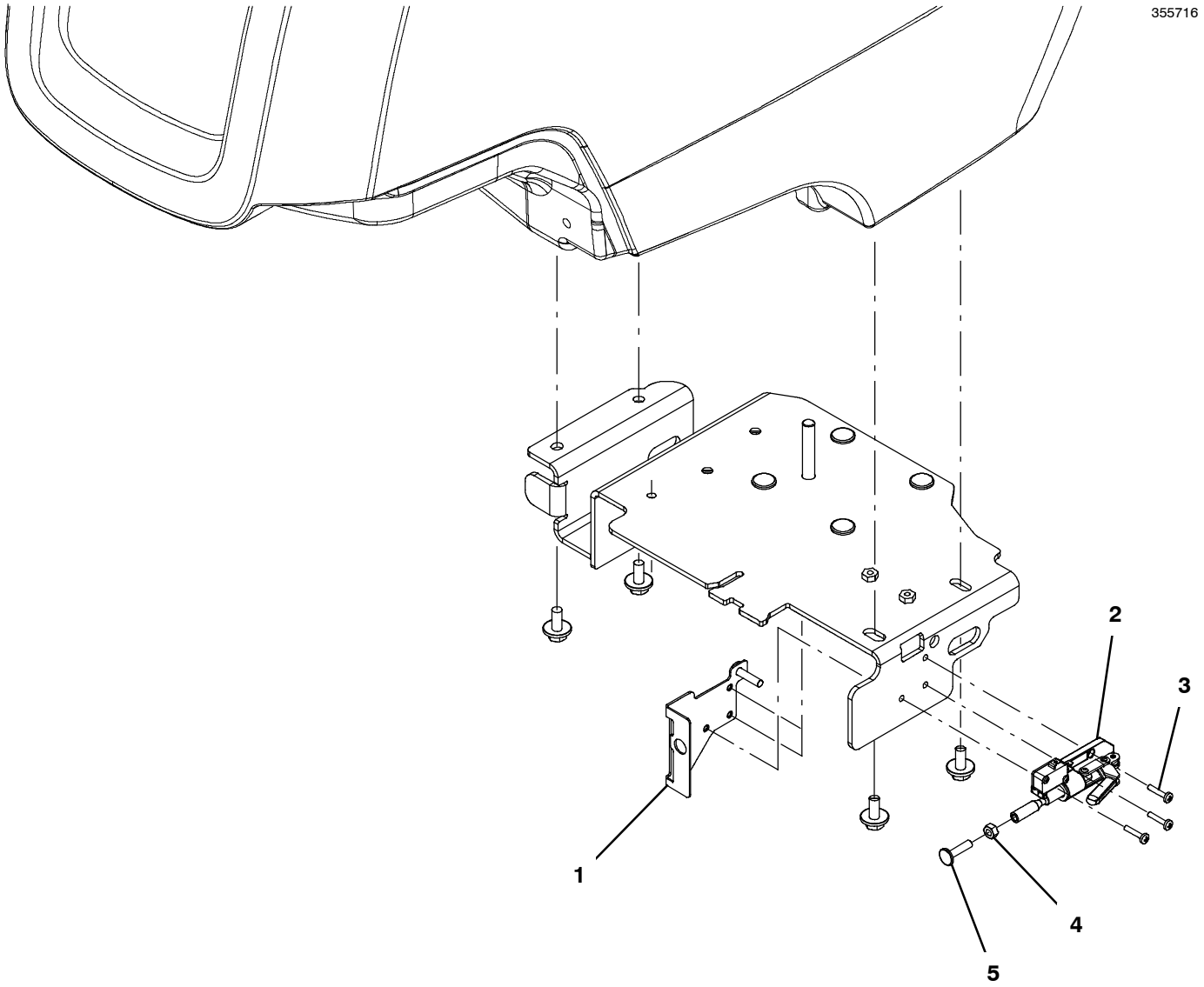

Ref.	Part No.	Serial Number	Description	Qty.
1	1211230	(10000000- 20000000)	Plate Wldt, Brake	1
2	1209983	(10000000- 20000000)	Clamp, Brake, Parking	1
3	24265	(10000000- 20000000)	Screw, Pan, Phl, M4 X 0.70 X 16, Ss	3
4	07785	(10000000- 20000000)	Nut, Hex, Std, M6 X 1.00, Ss	1
5	1017416	(10000000- 20000000)	Screw, Weld, M6 X 1.00 X 25, Thru, Ss	1

DOCUMENTATION GROUP

Ref.	Part No.	Serial Number	Description	Qty.
	9014505	(10000000- 20000000)	Manual, Parts [T300e, Na]	1
	9014506	(10000000- 20000000)	Manual, Oprtr [T300e, En, Na]	1
	9014507	(10000000- 20000000)	Manual, Oprtr [T300e, Es, Na]	1
	9014508	(10000000- 20000000)	Manual, Oprtr [T300e, Fr, Na]	1
	9014509	(10000000- 20000000)	Instr, Wall Chart [T300e, Na]	1
	9014510	(10000000- 20000000)	Manual, Service [T300/T300e, En]	1

To view, print, order, download the latest Parts manual, other language Operator manuals, and Use and Care Guides (wall charts), visit:

www.tennantco.com/manual

ec-H2O NANOCLEAN MODULE BREAKDOWN

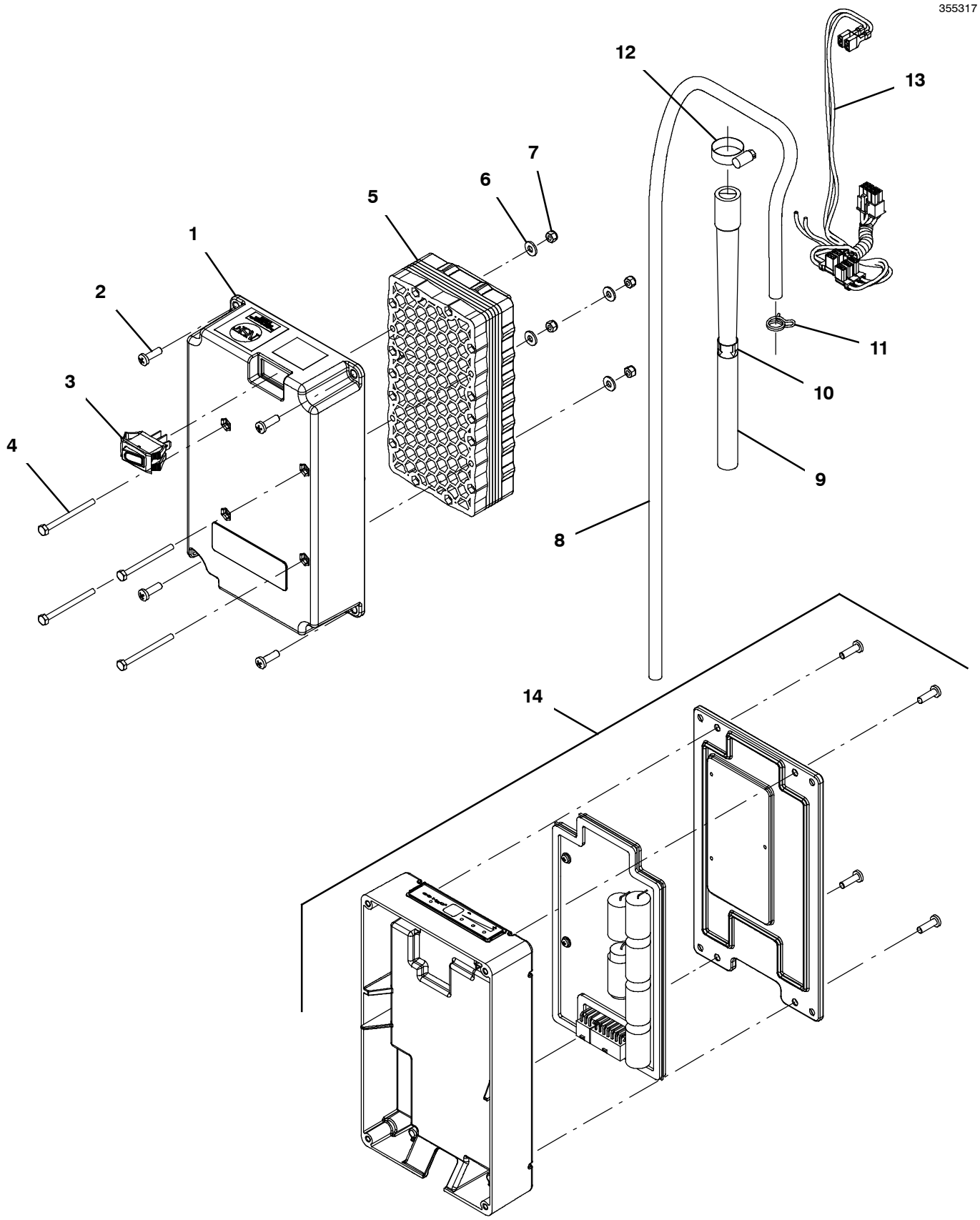

ec- H2O NANOCLEAN MODULE BREAKDOWN

	Ref.	Part No.	Serial Number	Description	Qty.
∇		9011810	(10000000- 20000000)	Module Kit, Replmt [Ec- H2o, B 02] (Includes ec- H2O NanoClean Cartridge)	1
▲∇		9014126	(10000000- 20000000)	Ec- H2o Nc Kit [Module B, Plumbing]	1
▲▲	1	1208823	(10000000- 20000000)	Housing, Module, Upper, Ec- H2o	1
▲▲	2	1015506	(10000000- 20000000)	Screw, Pan, Phl, M5 X 16, Tcut [Plastic]	4
▲▲	3	1044393	(10000000- 20000000)	Switch, Rocker, Spst, Mom	1
▲▲	4	32509	(10000000- 20000000)	Screw, Hex, M4 X 0.70 X 50, Ss	4
▲▲	5	1208164	(10000000- 20000000)	Electrode, 5 Plate, High Flow	1
▲▲	6	41579	(10000000- 20000000)	Washer, Flat, 08, Ss	4
▲▲	7	33932	(10000000- 20000000)	Nut, Hex, Lock, M4 X 0.70, Nl, Ss	4
▲▲	8	1006415	(10000000- 20000000)	Hose, Afmkt, Pvc, Clr, 0.25id, 03ft	1
▲▲	9	1208526	(10000000- 20000000)	Hose, Molded, Bm08/Bm06	1
▲▲	10	1049637	(10000000- 20000000)	Label, Direction [Ec- H2o]	1
▲▲	11	613735	(10000000- 20000000)	Clamp, Hose, Wir, .40 - .42, Yel	1
▲▲	12	54333	(10000000- 20000000)	Clamp, Hose, Wormdrive, 0.31- 0.88d, .31w	1
▲▲	13	1073286	(10000000- 20000000)	Harness, Ele, Module B2 [Ec- H2o]	1
▲	14	9014127	(10000000- 20000000)	Controller Kit, Replmt [Ec- H2o Nc] (Includes ec- H2O NanoClean Cartridge)	1

∇ ASSEMBLY

▲ INCLUDED IN ASSEMBLY

ORBITAL HEAD ECCENTRIC DRIVE BREAKDOWN

355337

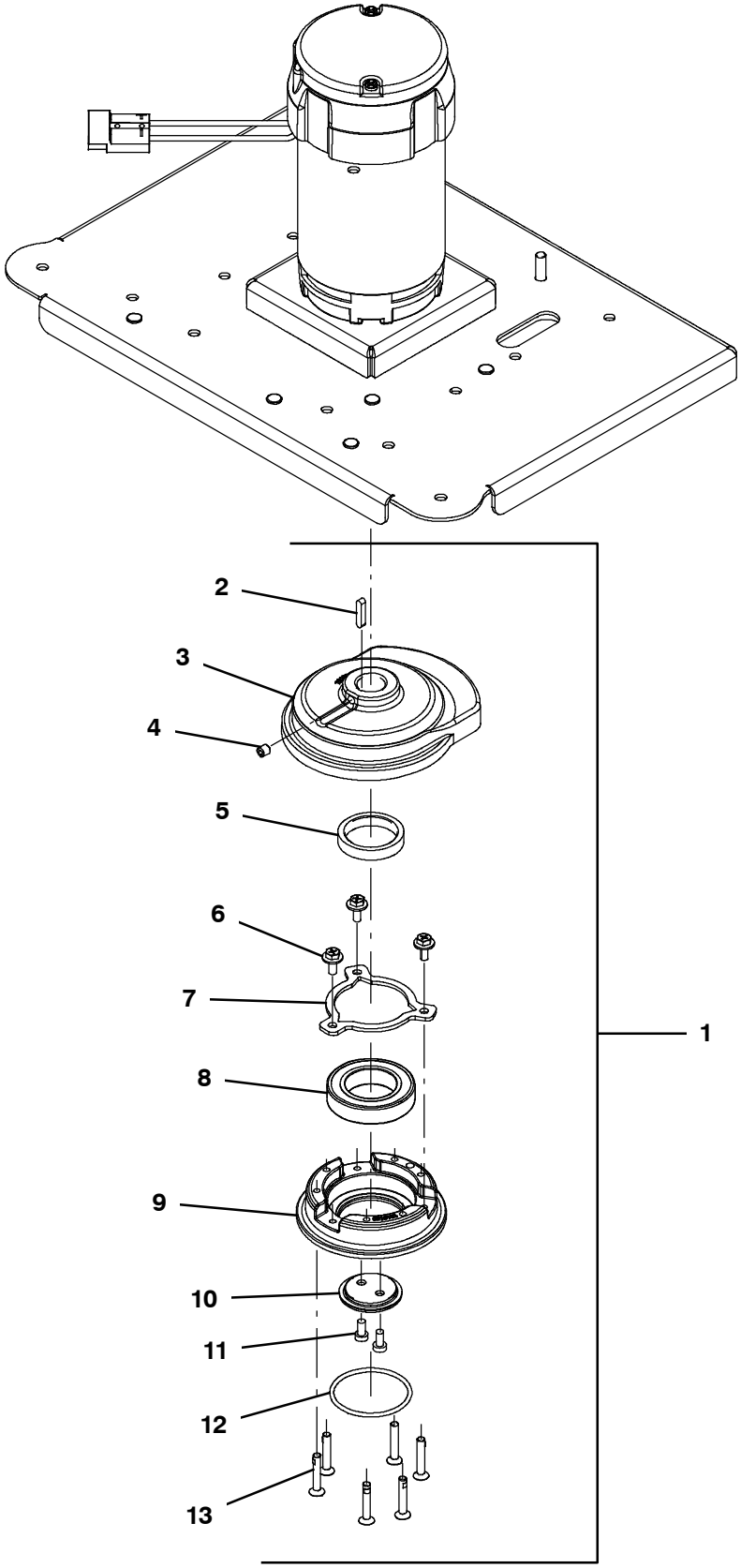

ORBITAL HEAD ECCENTRIC DRIVE BREAKDOWN

	Ref.	Part No.	Serial Number	Description	Qty.
∇	1	9014175	(10000000- 20000000)	Kit, Eccentric Assy, [T300]	1
▲	2	1014328	(10000000- 20000000)	Key, Sq, 05mm X 05mm, 25mml	1
▲	3	N/A	(10000000- 20000000)	Balance, Eccentric, Step [Machined]	1
▲	4	N/A	(10000000- 20000000)	Screw, Set, M8 X 1.25 X 8, SS	1
▲	5	N/A	(10000000- 20000000)	Spacer, Eccentric	1
▲	6	N/A	(10000000- 20000000)	Screw, Hex, M6 X 1.00 X 16, Sems	3
▲	7	N/A	(10000000- 20000000)	Plate, Retainer, Brg, Outer	1
▲	8	1206608	(10000000- 20000000)	Bearing, Ball, 1.58b 2.68d 0.59w [2seal]	1
▲	9	N/A	(10000000- 20000000)	Housing, Bearing, Outer [Machined]	1
▲	10	N/A	(10000000- 20000000)	Retainer, Bearing, Inner [Qpq]	1
▲	11	N/A	(10000000- 20000000)	Screw, Soc, M6 X 1.00 X 12, 8.8, Low	2
▲	12	1208266	(10000000- 20000000)	O- Ring, 57.15 X 3.18, Nbr	1
▲	13	1212710	(10000000- 20000000)	Screw, Flt, Soc, M6 X 1.00 X 35, 10.9,Nl	6

∇ ASSEMBLY

▲ INCLUDED IN ASSEMBLY